G AB HB
Connectors

HANSA-FLEX

Properties

Connection 1	BSP nut thread
Sealing form 1	60° outer cone
Connection 2	BSP cylindrical external threads
Sealing form 2	60° inner cone
Design	Connectors
Construction	straight
Material	Steel
Surface	electro galvanised



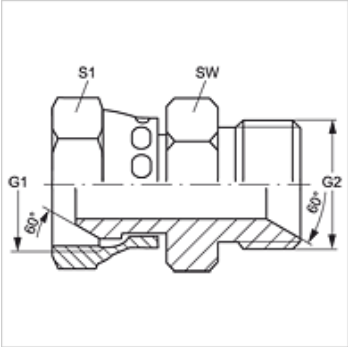

Item

Identification	G1	G2	AF (mm)	S1
G AB 02 HB	G 1/8" -28	G 1/8" -28	14	14
G AB 02 HB 04	G 1/8" -28	G 1/4" -19	19	14
G AB 04 HB 02	G 1/4" -19	G 1/8" -28	14	19
G AB 04 HB	G 1/4" -19	G 1/4" -19	19	19
G AB 04 HB 06	G 1/4" -19	G 3/8" -19	22	19
G AB 04 HB 08	G 1/4" -19	G 1/2" -14	27	19
G AB 06 HB 04	G 3/8" -19	G 1/4" -19	19	22
G AB 06 HB	G 3/8" -19	G 3/8" -19	22	22
G AB 06 HB 08	G 3/8" -19	G 1/2" -14	27	22
G AB 06 HB 12	G 3/8" -19	G 3/4" -14	32	22
G AB 08 HB 04	G 1/2" -14	G 1/4" -19	19	27
G AB 08 HB 06	G 1/2" -14	G 3/8" -19	22	27
G AB 08 HB	G 1/2" -14	G 1/2" -14	27	27
G AB 08 HB 10	G 1/2" -14	G 5/8" -14	30	27
G AB 08 HB 12	G 1/2" -14	G 3/4" -14	32	27
G AB 08 HB 16	G 1/2" -14	G 1" -11	41	27
G AB 10 HB 06	G 5/8" -14	G 3/8" -19	30	30
G AB 10 HB 08	G 5/8" -14	G 1/2" -14	27	30
G AB 10 HB	G 5/8" -14	G 5/8" -14	30	30
G AB 10 HB 12	G 5/8" -14	G 3/4" -14	32	30
G AB 10 HB 16	G 5/8" -14	G 1" -11	41	30
G AB 12 HB 06	G 3/4" -14	G 3/8" -19	27	32
G AB 12 HB 08	G 3/4" -14	G 1/2" -14	27	32
G AB 12 HB 10	G 3/4" -14	G 5/8" -14	30	32
G AB 12 HB	G 3/4" -14	G 3/4" -14	32	32
G AB 12 HB 16	G 3/4" -14	G 1" -11	41	32
G AB 12 HB 20	G 3/4" -14	G 1.1/4" -11	50	32
G AB 16 HB 08	G 1" -11	G 1/2" -14	32	41
G AB 16 HB 10	G 1" -11	G 5/8" -14	32	41
G AB 16 HB 12	G 1" -11	G 3/4" -14	32	41
G AB 16 HB	G 1" -11	G 1" -11	41	41
G AB 16 HB 20	G 1" -11	G 1.1/4" -11	50	41
G AB 20 HB 12	G 1.1/4" -11	G 3/4" -14	41	50
G AB 20 HB 16	G 1.1/4" -11	G 1" -11	41	50
G AB 20 HB	G 1.1/4" -11	G 1.1/4" -11	50	50
G AB 20 HB 24	G 1.1/4" -11	G 1.1/2" -11	55	50
G AB 24 HB 20	G 1.1/2" -11	G 1.1/4" -11	50	55
G AB 24 HB	G 1.1/2" -11	G 1.1/2" -11	55	55
G AB 24 HB 32	G 1.1/2" -11	G 2" -11	70	55
G AB 32 HB 24	G 2" -11	G 1.1/2" -11	60	70
G AB 32 HB	G 2" -11	G 2" -11	70	70

SW, S1, S2 = With across flats

Product versions

G AB HB VA	Connectors, Stainless steel

Despite careful checking, we cannot guarantee the accuracy of all information included on this site, and we accept no liability.