G AB HJ
Connectors

Properties

Sealing form 1	60° outer cone
Connection 1	BSP nut thread
Connection 2	UN/UNF external threads
Sealing form 2	74° outer cone
Design	Connectors
Construction	straight
Material	Steel
Surface	electro galvanised



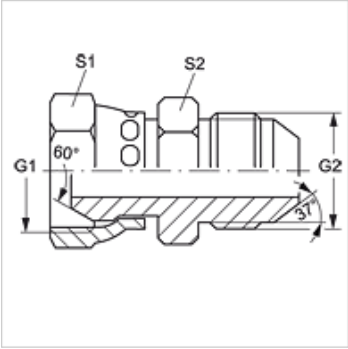

Item

Identification	G1	G2	S1	S2
G AB 02 HJ 04	G 1/8" -28	7/16"-20 UNF	14	13
G AB 04 HJ	G 1/4" -19	7/16"-20 UNF	19	19
G AB 04 HJ 05	G 1/4" -19	1/2"-20 UNF	19	19
G AB 04 HJ 06	G 1/4" -19	9/16"-18 UNF	19	16
G AB 06 HJ	G 3/8" -19	9/16"-18 UNF	22	19
G AB 06 HJ 04	G 3/8" -19	7/16"-20 UNF	22	19
G AB 06 HJ 08	G 3/8" -19	3/4"-16 UNF	22	19
G AB 06 HJ 10	G 3/8" -19	7/8"-14 UNF	22	24
G AB 08 HJ	G 1/2" -14	3/4"-16 UNF	27	22
G AB 08 HJ 04	G 1/2" -14	7/16"-20 UNF	27	22
G AB 08 HJ 06	G 1/2" -14	9/16"-18 UNF	27	22
G AB 08 HJ 10	G 1/2" -14	7/8"-14 UNF	27	24
G AB 12 HJ	G 3/4" -14	1.1/16" -12 UN	32	27
G AB 12 HJ 10	G 3/4" -14	7/8"-14 UNF	32	27
G AB 16 HJ	G 1" -11	1.5/16" -12 UN	41	46
G AB 16 HJ 12	G 1" -11	1.1/16" -12 UN	41	36

SW, S1, S2 = With across flats

Despite careful checking, we cannot guarantee the accuracy of all information included on this site, and we accept no liability.