G AJ HBED VA
Connectors

HANSA-FLEX

Properties

Connection 1	UN/UNF nut threads
Sealing form 1	74° inner cone
Connection 2	BSP cylindrical external threads
Sealing form 2	60° inner cone + shape E
Design	Connectors
Construction	straight
Material	Stainless steel



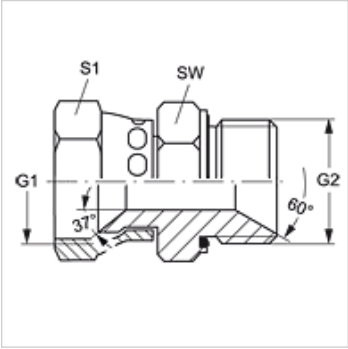

Ordering information

Seals of NBR
FPM (Viton) on request

Item

Identification	G1	G2	AF (mm)	S1
G AJ 04 HB 02 ED VA	7/16"-20 UNF	G 1/8" -28	14	17
G AJ 04 HBED VA	7/16"-20 UNF	G 1/4" -19	19	17
G AJ 05 HB 04 ED VA	1/2"-20 UNF	G 1/4" -19	19	17
G AJ 06 HB 04 ED VA	9/16"-18 UNF	G 1/4" -19	19	19
G AJ 06 HBED VA	9/16"-18 UNF	G 3/8" -19	22	19
G AJ 08 HB 06 ED VA	3/4"-16 UNF	G 3/8" -19	32	24
G AJ 08 HBED VA	3/4"-16 UNF	G 1/2" -14	27	24
G AJ 10 HB 08 ED VA	7/8" -14 UNF	G 1/2" -14	27	27
G AJ 12 HBED VA	1.1/16" -12 UN	G 3/4" -14	32	32
G AJ 12 HB 16 ED VA	1.1/16" -12 UN	G 1" -11	41	32
G AJ 16 HB 12 ED VA	1.5/16" -12 UN	G 3/4" -14	32	41
G AJ 16 HBED VA	1.5/16" -12 UN	G 1" -11	41	41
G AJ 20 HB 16 ED VA	1.5/8" -12 UN	G 1" -11	41	50
G AJ 20 HBED VA	1.5/8" -12 UN	G 1.1/4" -11	50	50
G AJ 24 HB 20 ED VA	1.7/8" -12 UN	G 1.1/4" -11	50	55
G AJ 24 HBED VA	1.7/8" -12 UN	G 1.1/2" -11	55	55

SW, S1, S2 = With across flats

Spare parts

WD V	Soft seal for ED fittings

Despite careful checking, we cannot guarantee the accuracy of all information included on this site, and we accept no liability.