G B HL
Connectors, banjo

HANSA-FLEX

Properties

Connection 1	Metric banjos
Connection 2	metric cylindrical outer thread
Sealing form 2	24° inner cone
Design	Connectors, ring thread piece
Construction	straight
Material	Steel
Surface	electro galvanised



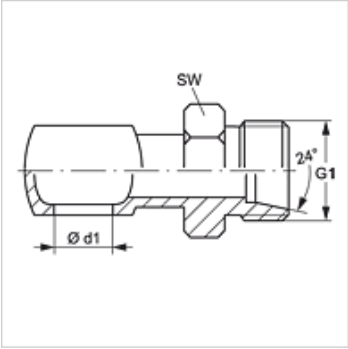

Item

Identification	External pipe Ø (mm)	G1	Ø d1 (mm)	for hollow screw	AF (mm)
GB 04 HL	6	M 12 x 1.5	10	M 10	17
GB 06 HL	8	M 14 x 1.5	12	M 12	19
GB 08 HL 06	8	M 14 x 1.5	14	M 14	19
GB 08 HL	10	M 16 x 1.5	14	M 14	22
GB 10 HL	12	M 18 x 1.5	16	M 16	24
GB 13 HL 10	12	M 18 x 1.5	18	M 18	24
GB 13 HL	15	M 22 x 1.5	18	M 18	27
GB 16 HL 13	15	M 22 x 1.5	22	M 22	27
GB 16 HL	18	M 26 x 1.5	22	M 22	32

AF = Width across flats

Despite careful checking, we cannot guarantee the accuracy of all information included on this site, and we accept no liability.