G H
Connectors

HANSA-FLEX

Properties

Connection 1	metric cylindrical outer thread
Sealing form 1	60° inner cone
Connection 2	metric cylindrical outer thread
Sealing form 2	60° inner cone
Design	Connectors
Construction	straight
Material	Steel
Surface	electro galvanised



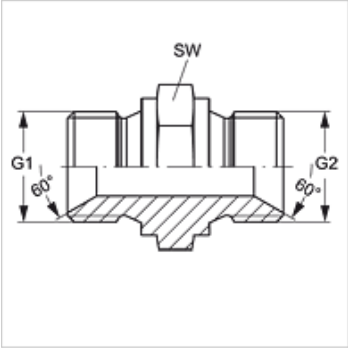

Item

Identification	G1	G2	AF (mm)
G 04 H 02	M 12 x 1.5	M 10 x 1	17
G H 04	M 12 x 1.5	M 12 x 1.5	17
G 06 H 04	M 14 x 1.5	M 12 x 1.5	19
G H 06	M 14 x 1.5	M 14 x 1.5	19
G 08 H 04	M 16 x 1.5	M 12 x 1.5	22
G 08 H 06	M 16 x 1.5	M 14 x 1.5	22
G H 08	M 16 x 1.5	M 16 x 1.5	22
G H 10	M 18 x 1.5	M 18 x 1.5	24
G 13 H 10	M 22 x 1.5	M 18 x 1.5	27
G H 13	M 22 x 1.5	M 22 x 1.5	27
G H 16	M 26 x 1.5	M 26 x 1.5	32
G H 20	M 30 x 1.5	M 30 x 1.5	36
G H 25	M 38 x 1.5	M 38 x 1.5	46
G 25 H 20	M 38 x 1.5	M 30 x 1.5	46
G 32 H 25	M 45 x 1.5	M 38 x 1.5	55
G H 32	M 45 x 1.5	M 45 x 1.5	55
G 40 H 32	M 52 x 1.5	M 45 x 1.5	55
G H 40	M 52 x 1.5	M 52 x 1.5	55
G 50 H 40	M 65 x 2	M 52 x 1.5	65
G H 50	M 65 x 2	M 65 x 2	65
G H 60	M 78 x 2	M 78 x 2	80

AF = Width across flats

Despite careful checking, we cannot guarantee the accuracy of all information included on this site, and we accept no liability.