G HB HJ
Connection sockets

HANSA-FLEX

Properties

Sealing form 1	60° inner cone
Connection 1	BSP external thread, cylindrical
Connection 2	UN/UNF external threads
Sealing form 2	74° outer cone
Design	Connection sockets
Construction	straight
Material	Steel
Surface	electro galvanised



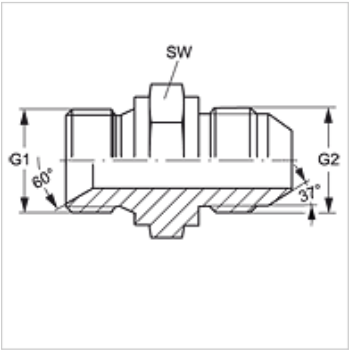

Item

Identification	G1	G2	AF (mm)
G HB 02 HJ 10	G 1/8" -28	7/8"-14 UNF	24
G HB 04 HJ 10	G 1/4" -19	7/8"-14 UNF	24
G HB 08 HJ 05	G 1/2" -14	1/2"-20 UNF	27
G HB 08 HJ 14	G 1/2" -14	1.3/16" -12 UN	32
G HB 08 HJ 16	G 1/2" -14	1.5/16" -12 UN	41
G HB 10 HJ 08	G 5/8" -14	3/4"-16 UNF	27
G HB 10 HJ	G 5/8" -14	7/8"-14 UNF	27
G HB 10 HJ 12	G 5/8" -14	1.1/16" -12 UN	32
G HB 10 HJ 16	G 5/8" -14	1.5/16" -12 UN	41
G HB 12 HJ 06	G 3/4" -14	9/16"-18 UNF	32
G HB 12 HJ 14	G 3/4" -14	1.3/16" -12 UN	32
G HB 12 HJ 20	G 3/4" -14	1.5/8" -12 UN	50
G HB 16 HJ 08	G 1" -11	3/4"-16 UNF	41
G HB 16 HJ 10	G 1" -11	7/8"-14 UNF	41
G HB 16 HJ 14	G 1" -11	1.3/16" -12 UN	41
G HB 20 HJ 12	G 1.1/4" -11	1.1/16" -12 UN	50
G HB 24 HJ 16	G 1.1/2" -11	1.5/16" -12 UN	55
G HB 24 HJ 32	G 1.1/2" -11	2.1/2" -12 UN	60
G HB 32 HJ 24	G 2" -11	1.7/8" -12 UN	60
G HB 32 HJ	G 2" -11	2.1/2" -12 UN	60

AF = Width across flats

Despite careful checking, we cannot guarantee the accuracy of all information included on this site, and we accept no liability.