G HB IR
Screw-on socket

HANSA-FLEX

Properties

Connection 1	BSP external thread, cylindrical
Sealing form 1	60° inner cone
Connection 2	BSP cylindrical internal threads
Sealing form 2	Flat seal
Design	Screw-on socket
Construction	straight
Material	Steel
Surface	electro galvanised



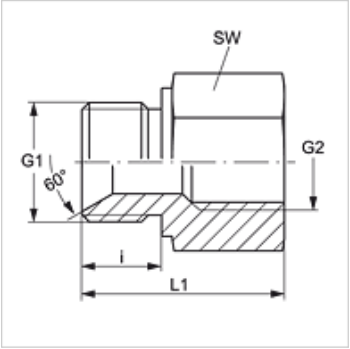

Item

Identification	G1	G2	AF (mm)
G HB 02 IR	G 1/8" -28	G 1/8" -28	17
G HB 02 IR 04	G 1/8" -28	G 1/4" -19	19
G HB 04 IR 02	G 1/4" -19	G 1/8" -28	19
G HB 04 IR	G 1/4" -19	G 1/4" -19	19
G HB 04 IR 06	G 1/4" -19	G 3/8" -19	24
G HB 04 IR 08	G 1/4" -19	G 1/2" -14	27
G HB 06 IR 02	G 3/8" -19	G 1/8" -28	24
G HB 06 IR 04	G 3/8" -19	G 1/4" -19	22
G HB 06 IR	G 3/8" -19	G 3/8" -19	24
G HB 06 IR 08	G 3/8" -19	G 1/2" -14	27
G HB 08 IR 02	G 1/2" -14	G 1/8" -28	27
G HB 08 IR 04	G 1/2" -14	G 1/4" -19	27
G HB 08 IR 06	G 1/2" -14	G 3/8" -19	27
G HB 08 IR	G 1/2" -14	G 1/2" -14	27
G HB 08 IR 12	G 1/2" -14	G 3/4" -14	36
G HB 12 IR 04	G 3/4" -14	G 1/4" -19	32
G HB 12 IR 06	G 3/4" -14	G 3/8" -19	32
G HB 12 IR 08	G 3/4" -14	G 1/2" -14	32
G HB 12 IR	G 3/4" -14	G 3/4" -14	36
G HB 12 IR 16	G 3/4" -14	G 1" -11	41
G HB 16 IR 06	G 1" -11	G 3/8" -19	41
G HB 16 IR 08	G 1" -11	G 1/2" -14	41
G HB 16 IR 12	G 1" -11	G 3/4" -14	41
G HB 16 IR	G 1" -11	G 1" -11	41
G HB 16 IR 20	G 1" -11	G 1.1/4" -11	50
G HB 20 IR 04	G 1.1/4" -11	G 1/4" -19	50
G HB 20 IR 08	G 1.1/4" -11	G 1/2" -14	50
G HB 20 IR 12	G 1.1/4" -11	G 3/4" -14	50
G HB 20 IR 16	G 1.1/4" -11	G 1" -11	41
G HB 20 IR	G 1.1/4" -11	G 1.1/4" -11	50
G HB 20 IR 24	G 1.1/4" -11	G 1.1/2" -11	55
G HB 24 IR 12	G 1.1/2" -11	G 3/4" -14	55
G HB 24 IR 20	G 1.1/2" -11	G 1.1/4" -11	55
G HB 24 IR	G 1.1/2" -11	G 1.1/2" -11	55
G HB 24 IR 16	G 1.1/2" -11	G 1" -11	55
G HB 24 IR 32	G 1.1/2" -11	G 2" -11	70
G HB 32 IR 16	G 2" -11	G 1" -11	70
G HB 32 IR 20	G 2" -11	G 1.1/4" -11	70
G HB 32 IR 24	G 2" -11	G 1.1/2" -11	70
G HB 32 IR	G 2" -11	G 2" -11	70

AF = Width across flats

Product versions

G HB IR VA	Screw-on socket, Stainless steel

Despite careful checking, we cannot guarantee the accuracy of all information included on this site, and we accept no liability.