G HBED HJ VA
Connection sockets

HANSA-FLEX

Properties

Sealing form 1	60° inner cone + shape E
Connection 1	BSP external thread, cylindrical
Connection 2	UN/UNF external threads
Sealing form 2	74° outer cone
Design	Connection sockets
Construction	straight
Material	Stainless steel



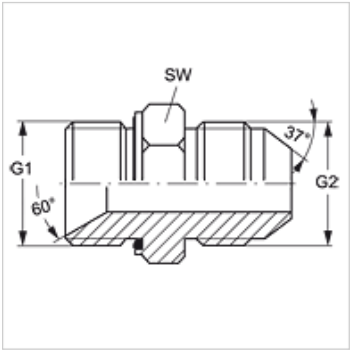

Ordering information

Seals of NBR
FPM (Viton) on request

Item

Identification	G1	G2	AF (mm)
G HBED 02 HJ 04 VA	G 1/8" -28	7/16"-20 UNF	14
G HBED 02 HJ 05 VA	G 1/8" -28	1/2"-20 UNF	14
G HBED 02 HJ 06 VA	G 1/8" -28	9/16"-18 UNF	16
G HBED 04 HJ VA	G 1/4" -19	7/16"-20 UNF	19
G HBED 04 HJ 05 VA	G 1/4" -19	1/2"-20 UNF	19
G HBED 04 HJ 06 VA	G 1/4" -19	9/16"-18 UNF	19
G HBED 04 HJ 08 VA	G 1/4" -19	3/4"-16 UNF	19
G HBED 06 HJ 04 VA	G 3/8" -19	7/16"-20 UNF	22
G HBED 06 HJ 05 VA	G 3/8" -19	1/2"-20 UNF	22
G HBED 06 HJ VA	G 3/8" -19	9/16"-18 UNF	22
G HBED 06 HJ 08 VA	G 3/8" -19	3/4"-16 UNF	22
G HBED 06 HJ 10 VA	G 3/8" -19	7/8"-14 UNF	24
G HBED 08 HJ 04 VA	G 1/2" -14	7/16"-20 UNF	27
G HBED 08 HJ 06 VA	G 1/2" -14	9/16"-18 UNF	30
G HBED 08 HJ VA	G 1/2" -14	3/4"-16 UNF	30
G HBED 08 HJ 10 VA	G 1/2" -14	7/8"-14 UNF	30
G HBED 08 HJ 12 VA	G 1/2" -14	1.1/16" -12 UN	30
G HBED 12 HJ 08 VA	G 3/4" -14	3/4"-16 UNF	36
G HBED 12 HJ 10 VA	G 3/4" -14	7/8"-14 UNF	36
G HBED 12 HJ VA	G 3/4" -14	1.1/16" -12 UN	36
G HBED 12 HJ 16 VA	G 3/4" -14	1.5/16" -12 UN	36
G HBED 16 HJ 10 VA	G 1" -11	7/8"-14 UNF	41
G HBED 16 HJ 12 VA	G 1" -11	1.1/16" -12 UN	41
G HBED 16 HJ VA	G 1" -11	1.5/16" -12 UN	41
G HBED 16 HJ 20 VA	G 1" -11	1.5/8" -12 UN	46
G HBED 20 HJ 16 VA	G 1.1/4" -11	1.5/16" -12 UN	50
G HBED 20 HJ VA	G 1.1/4" -11	1.5/8" -12 UN	50
G HBED 20 HJ 24 VA	G 1.1/4" -11	1.7/8" -12 UN	50
G HBED 24 HJ 20 VA	G 1.1/2" -11	1.5/8" -12 UN	55
G HBED 24 HJ VA	G 1.1/2" -11	1.7/8" -12 UN	55

AF = Width across flats

Product versions

G HBED HJ	Connection sockets, Steel

Spare parts

WD V	Soft seal for ED fittings

Despite careful checking, we cannot guarantee the accuracy of all information included on this site, and we accept no liability.