G HRK VA
Screw-in sockets

Properties

Connection 1	BSPT conical external threads
Sealing form 1	thread seal
Connection 2	BSPT conical external threads
Sealing form 2	thread seal
Design	Screw-in sockets
Construction	straight
Material	Stainless steel



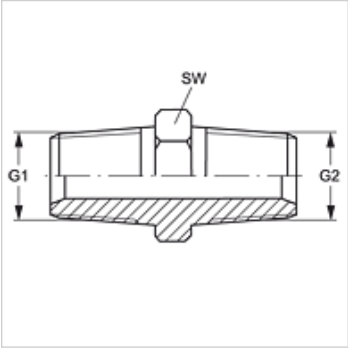

Item

Identification	G1	G2	AF (mm)
G HRK 02 VA	R 1/8" K	R 1/8" K	11
G 04 HRK 02 VA	R 1/4" K	R 1/8" K	14
G HRK 04 VA	R 1/4" K	R 1/4" K	14
G 06 HRK 04 VA	R 3/8" K	R 1/4" K	17
G HRK 06 VA	R 3/8" K	R 3/8" K	17
G 08 HRK 06 VA	R 1/2" K	R 3/8" K	22
G HRK 08 VA	R 1/2" K	R 1/2" K	22
G 12 HRK 08 VA	R 3/4" K	R 1/2" K	27
G HRK 12 VA	R 3/4" K	R 3/4" K	27
G 16 HRK 12 VA	R 1" K	R 3/4" K	36
G HRK 16 VA	R 1" K	R 1" K	36
G 20 HRK 16 VA	R 1.1/4" K	R 1" K	46
G HRK 20 VA	R 1.1/4" K	R 1.1/4" K	25
G 24 HRK 20 VA	R 1.1/2" K	R 1.1/4" K	50
G HRK 24 VA	R 1.1/2" K	R 1.1/2" K	55
G HRK 32 VA	R 2" K	R 2" K	70

AF = Width across flats

Product versions

G HRK	Screw-in sockets, Steel

Despite careful checking, we cannot guarantee the accuracy of all information included on this site, and we accept no liability.