G HSA
Connection sockets

Properties

Connection 1	UN/UNF external threads
Sealing form 1	45° outer cone
Connection 2	UN/UNF external threads
Sealing form 2	45° outer cone
Design	Connection sockets
Construction	straight
Material	Brass



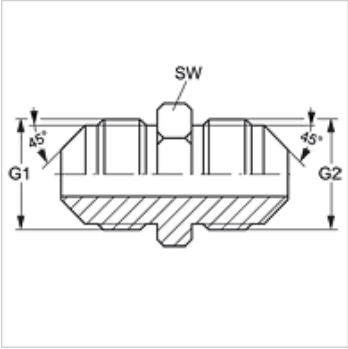

Item

Identification	G1 + G2	AF (mm)
G HSA 06	5/8"-18 UNF	16

AF = Width across flats

Despite careful checking, we cannot guarantee the accuracy of all information included on this site, and we accept no liability.