G IN HJ VA
Connection sockets

Properties

Connection 1	NPT internal thread
Sealing form 1	thread seal
Connection 2	UN/UNF external threads
Sealing form 2	74° outer cone
Design	Connection sockets
Construction	straight
Material	Stainless steel



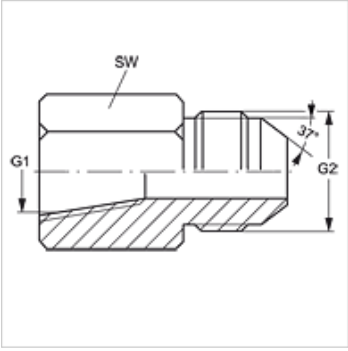

Item

Identification	G1	G2	AF (mm)
G IN 02 HJ 04 VA	1/8" -27 NPT	7/16"-20 UNF	14
G IN 04 HJ VA	1/4" -18 NPT	7/16"-20 UNF	19
G IN 04 HJ 05 VA	1/4" -18 NPT	1/2"-20 UNF	19
G IN 04 HJ 06 VA	1/4" -18 NPT	9/16"-18 UNF	19
G IN 06 HJ VA	3/8" -18 NPT	9/16"-18 UNF	22
G IN 06 HJ 08 VA	3/8" -18 NPT	3/4"-16 UNF	22
G IN 08 HJ VA	1/2" -14 NPT	3/4"-16 UNF	29
G IN 08 HJ 10 VA	1/2" -14 NPT	7/8"-14 UNF	29
G IN 12 HJ VA	3/4" -14 NPT	1.1/16" -12 UN	35

AF = Width across flats

Product versions

G IN HJ	Connection sockets, Steel

Despite careful checking, we cannot guarantee the accuracy of all information included on this site, and we accept no liability.