G IR
Connection sockets

HANSA-FLEX

Properties

Connection 1	BSP cylindrical internal threads
Connection 2	BSP cylindrical internal threads
Design	Connection sockets
Construction	straight
Material	Steel
Surface	electro galvanised

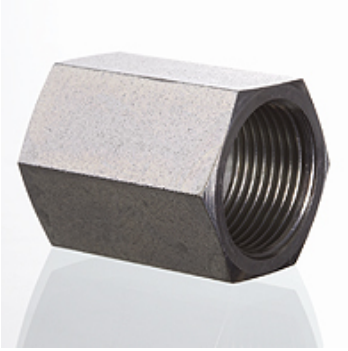

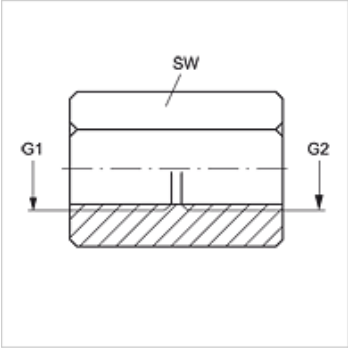

Item

Identification	G1	G2	AF (mm)
G IR 02	G 1/8" -28	G 1/8" -28	14
G IR 04 IR 02	G 1/4" -19	G 1/8" -28	19
G IR 04	G 1/4" -19	G 1/4" -19	19
G IR 06 IR 04	G 3/8" -19	G 1/4" -19	22
G IR 06	G 3/8" -19	G 3/8" -19	22
G IR 08 IR 04	G 1/2" -14	G 1/4" -19	27
G IR 08 IR 06	G 1/2" -14	G 3/8" -19	27
G IR 08	G 1/2" -14	G 1/2" -14	27
G IR 10 IR 08	G 5/8" -14	G 1/2" -14	30
G IR 10	G 5/8" -14	G 5/8" -14	30
G IR 12	G 3/4" -14	G 3/4" -14	32
G IR 12 IR 08	G 3/4" -14	G 1/2" -14	32
G IR 16 IR 12	G 1" -11	G 3/4" -14	41
G IR 16	G 1" -11	G 1" -11	41
G IR 20 IR 12	G 1.1/4" -11	G 3/4" -14	50
G IR 20 IR 16	G 1.1/4" -11	G 1" -11	50
G IR 20	G 1.1/4" -11	G 1.1/4" -11	50
G IR 24 IR 20	G 1.1/2" -11	G 1.1/4" -11	55
G IR 24	G 1.1/2" -11	G 1.1/2" -11	55
G IR 32 IR 24	G 2" -11	G 1.1/2" -11	70
G IR 32	G 2" -11	G 2" -11	70

AF = Width across flats

Product versions

G IR VA	Connection sockets, Stainless steel

Despite careful checking, we cannot guarantee the accuracy of all information included on this site, and we accept no liability.