G IR VA
Connection sockets

HANSA-FLEX

Properties

Connection 1	BSP cylindrical internal threads
Connection 2	BSP cylindrical internal threads
Design	Connection sockets
Construction	straight
Material	Stainless steel

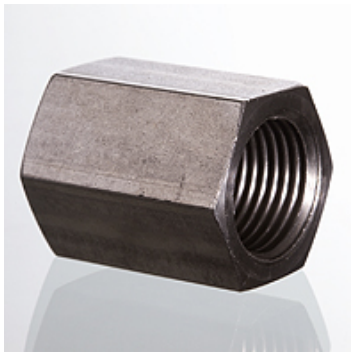

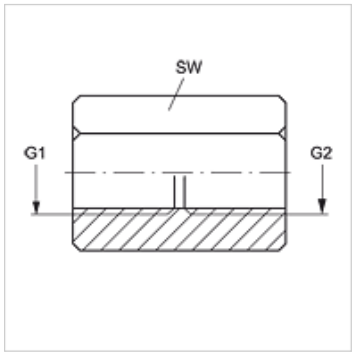

Item

Identification	G1	G2	AF (mm)
G 02 IR VA	G 1/8" -28	G 1/8" -28	14
G 04 IR 02 VA	G 1/4" -19	G 1/8" -28	17
G 04 IR VA	G 1/4" -19	G 1/4" -19	17
G 06 IR 04 VA	G 3/8" -19	G 1/4" -19	22
G 06 IR VA	G 3/8" -19	G 3/8" -19	22
G 08 IR 04 VA	G 1/2" -14	G 1/4" -19	27
G 08 IR 06 VA	G 1/2" -14	G 3/8" -19	27
G 08 IR VA	G 1/2" -14	G 1/2" -14	27
G 12 IR 06 VA	G 3/4" -14	G 3/8" -19	32
G 12 IR VA	G 3/4" -14	G 3/4" -14	32
G 16 IR 08 VA	G 1" -11	G 1/2" -14	41
G 16 IR 12 VA	G 1" -11	G 3/4" -14	41
G 16 IR VA	G 1" -11	G 1" -11	41
G 20 IR 16 VA	G 1.1/4" -11	G 1" -11	50
G 20 IR VA	G 1.1/4" -11	G 1.1/4" -11	50
G 24 IR 20 VA	G 1.1/2" -11	G 1.1/4" -11	55
G 24 IR VA	G 1.1/2" -11	G 1.1/2" -11	55
G 32 IR 24 VA	G 2" -11	G 1.1/2" -11	70
G 32 IR VA	G 2" -11	G 2" -11	70

AF = Width across flats

Product versions

G IR	Connection sockets, Steel

Despite careful checking, we cannot guarantee the accuracy of all information included on this site, and we accept no liability.