GE H00R VA

Screw-in sockets

Properties

Connection 1	metric cylindrical outer thread
Sealing form 1	60° inner cone
Connection 2	BSP cylindrical external threads
Sealing form 2	Shape A
Design	Screw-in sockets
Construction	straight
Material	Stainless steel



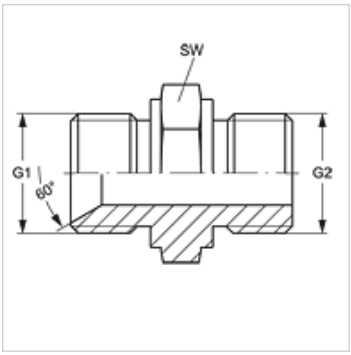

Item

Identification	G1	G2	AF (mm)
GE H 13 R VA	M 22 x 1.5	G 1/2" -14	27
GE H 16 R 13 VA	M 26 x 1.5	G 1/2" -14	27
GE H 16 R 20 VA	M 26 x 1.5	G 3/4" -14	32
GE H 20 R VA	M 30 x 1.5	G 3/4" -14	32
GE H 20 R 25 VA	M 30 x 1.5	G 1" -11	41
GE H 25 R VA	M 38 x 1.5	G 1" -11	41
GE H 25 R 32 VA	M 38 x 1.5	G 1.1/4" -11	50
GE H 32 R VA	M 45 x 1.5	G 1.1/4" -11	50
GE H 32 R 40 VA	M 45 x 1.5	G 1.1/2" -11	55
GE H 40 R VA	M 52 x 1.5	G 1.1/2" -11	55
GE H 50 R VA	M 65 x 2	G 2" -11	70
GE H 60 R VA	M 78 x 2	G 2.1/2" -11	85

AF = Width across flats

Product versions

GE H00R	Screw-in sockets, Steel

Despite careful checking, we cannot guarantee the accuracy of all information included on this site, and we accept no liability.