GE HMO AJ
Screw-in sockets

Properties

Connection 1	metric cylindrical outer thread
Sealing form 1	O-ring seal on screw-in socket
Connection 2	UN/UNF nut threads
Sealing form 2	74° inner cone
Design	Screw-in sockets
Construction	straight
Material	Steel
Surface	electro galvanised



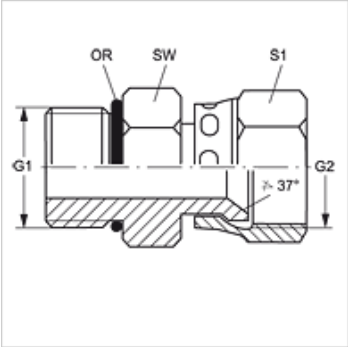

Item

Identification	G1	G2	AF (mm)	S1	OR
GE HMO 10 AJ 04	M 10 x 1	7/16"-20 UNF	14	16	8.2 x 1.5
GE HMO 10 AJ 05	M 10 x 1	1/2"-20 UNF	14	17	8.2 x 1.5
GE HMO 12 AJ 04	M 12 x 1.5	7/16"-20 UNF	17	16	9.4 x 2.1
GE HMO 12 AJ 05	M 12 x 1.5	1/2"-20 UNF	17	17	9.4 x 2.1
GE HMO 14 AJ 05	M 14 x 1.5	1/2"-20 UNF	19	17	11.4 x 2.1
GE HMO 14 AJ 06	M 14 x 1.5	9/16"-18 UNF	19	19	11.4 x 2.1
GE HMO 16 AJ 06	M 16 x 1.5	9/16"-18 UNF	22	19	13.4 x 2.1
GE HMO 16 AJ 08	M 16 x 1.5	3/4"-16 UNF	22	22	13.4 x 2.1
GE HMO 18 AJ 08	M 18 x 1.5	3/4"-16 UNF	24	22	15.4 x 2.1
GE HMO 18 AJ 10	M 18 x 1.5	7/8"-14 UNF	24	27	15.4 x 2.1
GE HMO 22 AJ 10	M 22 x 1.5	7/8"-14 UNF	27	27	19.4 x 2.1
GE HMO 22 AJ 12	M 22 x 1.5	1.1/16" -12 UN	27	32	19.4 x 2.1
GE HMO 27 AJ 12	M 27 x 2	1.1/16" -12 UN	32	32	23.7 x 2.8
GE HMO 27 AJ 16	M 27 x 2	1.5/16" -12 UN	32	38	23.7 x 2.8
GE HMO 33 AJ 16	M 33 x 2	1.5/16" -12 UN	41	38	29.7 x 2.8
GE HMO 42 AJ 20	M 42 x 2	1.5/8" -12 UN	50	50	38.7 x 2.8
GE HMO 48 AJ 24	M 48 x 2	1.7/8" -12 UN	60	60	46.7 x 2.8

SW, S1, S2 = With across flats

Despite careful checking, we cannot guarantee the accuracy of all information included on this site, and we accept no liability.