GE HMO HB
Screw-in sockets

HANSA-FLEX

Properties

Connection 1	metric cylindrical outer thread
Sealing form 1	O-ring seal on screw-in socket
Connection 2	BSP cylindrical external threads
Sealing form 2	60° inner cone
Design	Screw-in sockets
Construction	straight
Material	Steel
Surface	electro galvanised



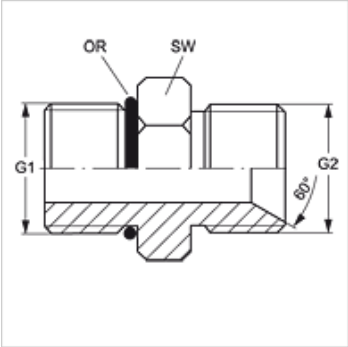

Item

Identification	G1	G2	AF (mm)	OR
GE HMO 10 HB 02	M 10 x 1	G 1/8" -28	15	8.00 x 1.50
GE HMO 12 HB 02	M 12 x 1.5	G 1/8" -28	18	9.30 x 2.30
GE HMO 12 HB 04	M 12 x 1.5	G 1/4" -19	18	9.30 x 2.30
GE HMO 14 HB 04	M 14 x 1.5	G 1/4" -19	20	11.30 x 2.30
GE HMO 14 HB 06	M 14 x 1.5	G 3/8" -19	20	11.30 x 2.30
GE HMO 16 HB 04	M 16 x 1.5	G 1/4" -19	22	13.30 x 2.30
GE HMO 16 HB 06	M 16 x 1.5	G 3/8" -19	22	13.30 x 2.30
GE HMO 18 HB 06	M 18 x 1.5	G 3/8" -19	24	15.30 x 2.30
GE HMO 18 HB 08	M 18 x 1.5	G 1/2" -14	24	15.30 x 2.30
GE HMO 20 HB 08	M 20 x 1.5	G 1/2" -14	28	17.30 x 2.30
GE HMO 22 HB 08	M 22 x 1.5	G 1/2" -14	28	19.30 x 2.30
GE HMO 22 HB 10	M 22 x 1.5	G 5/8" -14	28	19.30 x 2.30
GE HMO 22 HB 12	M 22 x 1.5	G 3/4" -14	28	19.30 x 2.30
GE HMO 27 HB 12	M 27 x 2	G 3/4" -14	33	23.47 x 2.95
GE HMO 27 HB 16	M 27 x 2	G 1" -11	33	23.47 x 2.95
GE HMO 33 HB 16	M 33 x 2	G 1" -11	42	29.74 x 2.95
GE HMO 42 HB 20	M 42 x 2	G 1.1/4" -11	50	38.00 x 3.00
GE HMO 48 HB 24	M 48 x 2	G 1.1/2" -11	56	44.00 x 3.00

AF = Width across flats

Despite careful checking, we cannot guarantee the accuracy of all information included on this site, and we accept no liability.