GE HN AB
Screw-in sockets

HANSA-FLEX

Properties

Connection 1	NPT external threads
Sealing form 1	thread seal
Connection 2	BSP nut thread
Sealing form 2	60° inner cone
Design	Screw-in sockets
Construction	straight
Material	Steel
Surface	electro galvanised



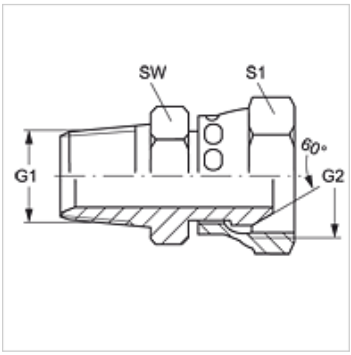

Item

Identification	G1	G2	AF (mm)	S1
GE HN 04 AB	1/4" -18 NPT	G 1/4" -19	16	19
GE HN 04 AB 06	1/4" -18 NPT	G 3/8" -19	18	22
GE HN 06 AB 04	3/8" -18 NPT	G 1/4" -19	21	19
GE HN 06 AB	3/8" -18 NPT	G 3/8" -19	22	22
GE HN 06 AB 08	3/8" -18 NPT	G 1/2" -14	25	22
GE HN 08 AB 06	1/2" -14 NPT	G 3/8" -19	22	22
GE HN 08 AB	1/2" -14 NPT	G 1/2" -14	25	27
GE HN 08 AB 10	1/2" -14 NPT	G 5/8" -14	27	30
GE HN 12 AB 08	3/4" -14 NPT	G 1/2" -14	33	27
GE HN 12 AB	3/4" -14 NPT	G 3/4" -14	33	32
GE HN 16 AB	1" -11.5 NPT	G 1" -11	38	41
GE HN 16 AB 12	1" -11.5 NPT	G 3/4" -14	35	32

SW, S1, S2 = With across flats

Product versions

GE HN AB VA	Screw-in sockets, Stainless steel

Despite careful checking, we cannot guarantee the accuracy of all information included on this site, and we accept no liability.