GE HN AJ VA
Screw-in sockets

HANSA-FLEX

Properties

Connection 1	NPT external threads
Sealing form 1	thread seal
Connection 2	UN/UNF nut threads
Sealing form 2	74° inner cone
Design	Screw-in sockets
Construction	straight
Material	Stainless steel



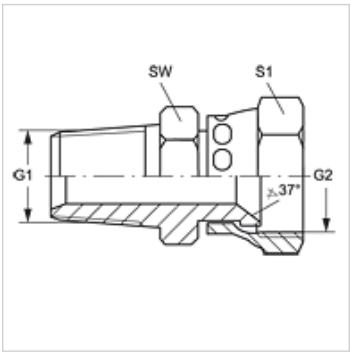

Item

Identification	G1	G2	AF (mm)	S1
GE HN 02 AJ 04 VA	1/8" -27 NPT	7/16"-20 UNF	14	14
GE HN 02 AJ 05 VA	1/8" -27 NPT	1/2"-20 UNF	14	17
GE HN 02 AJ 06 VA	1/8" -27 NPT	9/16"-18 UNF	17	14
GE HN 04 AJ VA	1/4" -18 NPT	7/16"-20 UNF	14	14
GE HN 04 AJ 05 VA	1/4" -18 NPT	1/2"-20 UNF	16	16
GE HN 04 AJ 06 VA	1/4" -18 NPT	9/16"-18 UNF	17	17
GE HN 04 AJ 08 VA	1/4" -18 NPT	3/4"-16 UNF	19	22
GE HN 06 AJ 04 VA	3/8" -18 NPT	7/16"-20 UNF	19	14
GE HN 06 AJ 05 VA	3/8" -18 NPT	1/2"-20 UNF	19	17
GE HN 06 AJ VA	3/8" -18 NPT	9/16"-18 UNF	19	17
GE HN 06 AJ 08 VA	3/8" -18 NPT	3/4"-16 UNF	22	22
GE HN 06 AJ 10 VA	3/8" -18 NPT	7/8"-14 UNF	22	27
GE HN 08 AJ 06 VA	1/2" -14 NPT	9/16"-18 UNF	25	19
GE HN 08 AJ VA	1/2" -14 NPT	3/4"-16 UNF	22	22
GE HN 08 AJ 10 VA	1/2" -14 NPT	7/8"-14 UNF	25	25
GE HN 08 AJ 12 VA	1/2" -14 NPT	1.1/16" -12 UN	27	32
GE HN 12 AJ 08 VA	3/4" -14 NPT	3/4"-16 UNF	27	22
GE HN 12 AJ 10 VA	3/4" -14 NPT	7/8"-14 UNF	32	27
GE HN 12 AJ VA	3/4" -14 NPT	1.1/16" -12 UN	27	32
GE HN 12 AJ 16 VA	3/4" -14 NPT	1.5/16" -12 UN	32	38
GE HN 16 AJ 12 VA	1" -11.5 NPT	1.1/16" -12 UN	27	38
GE HN 16 AJ VA	1" -11.5 NPT	1.5/16" -12 UN	36	38
GE HN 20 AJ VA	1.1/4" -11.5 NPT	1.5/8" -12 UN	46	50
GE HN 24 AJ VA	1.1/2" -11.5 NPT	1.7/8" -12 UN	58	58

SW, S1, S2 = With across flats

Product versions

GE HN AJ	Screw-in sockets, Steel

Despite careful checking, we cannot guarantee the accuracy of all information included on this site, and we accept no liability.