GE HN HJ VA
Screw-in sockets

Properties

Connection 1	NPT external threads
Sealing form 1	thread seal
Connection 2	UN/UNF external threads
Sealing form 2	74° outer cone
Design	Screw-in sockets
Construction	straight
Material	Stainless steel



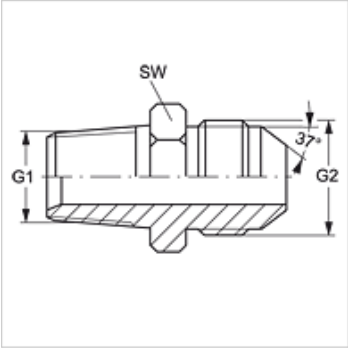

Item

Identification	G1	G2	AF (mm)
GE HN 02 HJ 04 VA	1/8" -27 NPT	7/16"-20 UNF	13
GE HN 02 HJ 05 VA	1/8" -27 NPT	1/2"-20 UNF	14
GE HN 02 HJ 06 VA	1/8" -27 NPT	9/16"-18 UNF	16
GE HN 04 HJ VA	1/4" -18 NPT	7/16"-20 UNF	14
GE HN 04 HJ 05 VA	1/4" -18 NPT	1/2"-20 UNF	14
GE HN 04 HJ 06 VA	1/4" -18 NPT	9/16"-18 UNF	16
GE HN 04 HJ 08 VA	1/4" -18 NPT	3/4"-16 UNF	19
GE HN 06 HJ VA	3/8" -18 NPT	9/16"-18 UNF	19
GE HN 06 HJ 04 VA	3/8" -18 NPT	7/16"-20 UNF	19
GE HN 06 HJ 05 VA	3/8" -18 NPT	1/2"-20 UNF	19
GE HN 06 HJ 08 VA	3/8" -18 NPT	3/4"-16 UNF	19
GE HN 06 HJ 10 VA	3/8" -18 NPT	7/8"-14 UNF	24
GE HN 08 HJ 04 VA	1/2" -14 NPT	7/16"-20 UNF	22
GE HN 08 HJ 06 VA	1/2" -14 NPT	9/16"-18 UNF	22
GE HN 08 HJ VA	1/2" -14 NPT	3/4"-16 UNF	22
GE HN 08 HJ 10 VA	1/2" -14 NPT	7/8"-14 UNF	24
GE HN 08 HJ 12 VA	1/2" -14 NPT	1.1/16" -12 UN	27
GE HN 08 HJ 16 VA	1/2" -14 NPT	1.5/16" -12 UN	35
GE HN 12 HJ 08 VA	3/4" -14 NPT	3/4"-16 UNF	27
GE HN 12 HJ 10 VA	3/4" -14 NPT	7/8"-14 UNF	27
GE HN 12 HJ VA	3/4" -14 NPT	1.1/16" -12 UN	27
GE HN 12 HJ 16 VA	3/4" -14 NPT	1.5/16" -12 UN	36
GE HN 16 HJ VA	1" -11.5 NPT	1.5/16" -12 UN	36
GE HN 16 HJ 12 VA	1" -11.5 NPT	1.1/16" -12 UN	36
GE HN 16 HJ 20 VA	1" -11.5 NPT	1.5/8" -12 UN	46
GE HN 20 HJ 16 VA	1.1/4" -11.5 NPT	1.5/16" -12 UN	46
GE HN 20 HJ VA	1.1/4" -11.5 NPT	1.5/8" -12 UN	46
GE HN 20 HJ 24 VA	1.1/4" -11.5 NPT	1.7/8" -12 UN	50
GE HN 24 HJ 20 VA	1.1/2" -11.5 NPT	1.5/8" -12 UN	50
GE HN 24 HJ VA	1.1/2" -11.5 NPT	1.7/8" -12 UN	50

AF = Width across flats

Product versions

GE HN HJ	Screw-in sockets, Steel

Despite careful checking, we cannot guarantee the accuracy of all information included on this site, and we accept no liability.