# GE HN HJOF
Screw-in sockets

## Properties

| | |
|---|---|
| **Connection 1** | NPT external threads |
| **Sealing form 1** | thread seal |
| **Connection 2** | ORFS external threads |
| **Sealing form 2** | flat seal with O-ring |
| **Design** | Screw-in sockets |
| **Construction** | straight |
| **Material** | Steel |
| **Surface** | electro galvanised |



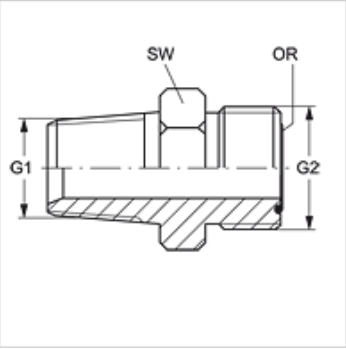


## Item

| Identification | G1 | G2 | AF (mm) | OR |
|---|---|---|---|---|
| **GE HN 02 HJOF 04** | 1/8" -27 NPT | 9/16"-18 UNF | 16 | 7.65 x 1.78 |
| **GE HN 04 HJOF** | 1/4" -18 NPT | 9/16"-18 UNF | 16 | 7.65 x 1.78 |
| **GE HN 04 HJOF 06** | 1/4" -18 NPT | 11/16" -16 UN | 19 | 9.25 x 1.78 |
| **GE HN 06 HJOF** | 3/8" -18 NPT | 11/16" -16 UN | 19 | 9.25 x 1.78 |
| **GE HN 06 HJOF 08** | 3/8" -18 NPT | 13/16" -16 UN | 22 | 12.42 x 1.78 |
| **GE HN 08 HJOF 06** | 1/2" -14 NPT | 11/16" -16 UN | 22 | 9.25 x 1.78 |
| **GE HN 08 HJOF** | 1/2" -14 NPT | 13/16" -16 UN | 22 | 12.42 x 1.78 |
| **GE HN 08 HJOF 10** | 1/2" -14 NPT | 1" -14 UNS | 27 | 15.60 x 1.78 |
| **GE HN 12 HJOF 08** | 3/4" -14 NPT | 13/16" -16 UN | 29 | 12.42 x 1.78 |
| **GE HN 12 HJOF 10** | 3/4" -14 NPT | 1" -14 UNS | 29 | 15.60 x 1.78 |
| **GE HN 12 HJOF** | 3/4" -14 NPT | 1.3/16" -12 UN | 32 | 18.77 x 1.78 |
| **GE HN 12 HJOF 16** | 3/4" -14 NPT | 1.7/16" -12 UN | 38 | 23.52 x 1.78 |
| **GE HN 16 HJOF 12** | 1" -11.5 NPT | 1.3/16" -12 UN | 35 | 18.77 x 1.78 |
| **GE HN 16 HJOF** | 1" -11.5 NPT | 1.7/16" -12 UN | 38 | 23.52 x 1.78 |
| **GE HN 20 HJOF** | 1.1/4" -11.5 NPT | 1.11/16" -12 UN | 48 | 29.87 x 1.78 |
| **GE HN 24 HJOF** | 1.1/2" -11.5 NPT | 2" -12 UN | 54 | 37.82 x 1.78 |

AF = Width across flats

## Product versions

| | |
|---|---|
| **GE HN HJOF VA** | Screw-in sockets, Stainless steel |

*Despite careful checking, we cannot guarantee the accuracy of all information included on this site, and we accept no liability.*