GE HN HJOF VA
Screw-in sockets

Properties

Connection 1	NPT external threads
Sealing form 1	thread seal
Connection 2	ORFS external threads
Sealing form 2	flat seal with O-ring
Design	Screw-in sockets
Construction	straight
Material	Stainless steel



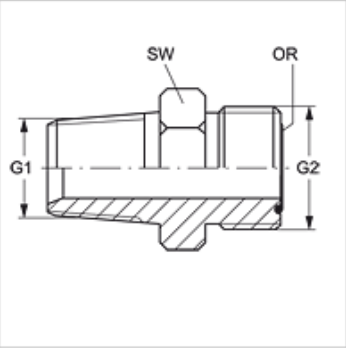

Ordering information

Seals of NBR
FPM (Viton) on request

Item

Identification	G1	G2	AF (mm)	OR
GE HN 02 HJOF 04 VA	1/8" -27 NPT	9/16"-18 UNF	16	7.65 x 1.78
GE HN 04 HJOF VA	1/4" -18 NPT	9/16"-18 UNF	16	7.65 x 1.78
GE HN 04 HJOF 06 VA	1/4" -18 NPT	11/16" -16 UN	19	9.25 x 1.78
GE HN 06 HJOF VA	3/8" -18 NPT	11/16" -16 UN	19	9.25 x 1.78
GE HN 06 HJOF 08 VA	3/8" -18 NPT	13/16" -16 UN	22	12.42 x 1.78
GE HN 08 HJOF VA	1/2" -14 NPT	13/16" -16 UN	22	12.42 x 1.78
GE HN 08 HJOF 10 VA	1/2" -14 NPT	1" -14 UNS	27	15.60 x 1.78
GE HN 12 HJOF VA	3/4" -14 NPT	1.3/16" -12 UN	32	18.77 x 1.78
GE HN 16 HJOF VA	1" -11.5 NPT	1.7/16" -12 UN	38	23.52 x 1.78

AF = Width across flats

Product versions

GE HN HJOF	Screw-in sockets, Steel

Despite careful checking, we cannot guarantee the accuracy of all information included on this site, and we accept no liability.