GE HN HSA
Screw-in sockets

HANSA-FLEX

Properties

Connection 1	NPT external threads
Sealing form 1	thread seal
Connection 2	UN/UNF external threads
Sealing form 2	45° outer cone
Design	Screw-in sockets
Construction	straight
Material	Steel
Surface	electro galvanised



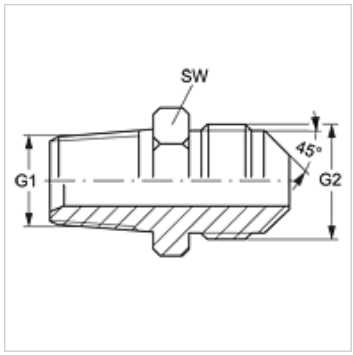

Item

Identification	G1	G2	AF (mm)
GE HN 04 HSA 06	1/4" -18 NPT	5/8"-18 UNF	16
GE HN 06 HSA	3/8" -18 NPT	5/8"-18 UNF	19
GE HN 08 HSA 06	1/2" -14 NPT	5/8"-18 UNF	22

AF = Width across flats

Despite careful checking, we cannot guarantee the accuracy of all information included on this site, and we accept no liability.