GE HR
Screw-in sockets

HANSA-FLEX

Properties

Connection 1	BSP external thread, cylindrical
Sealing form 1	Shape A
Connection 2	BSP cylindrical external threads
Sealing form 2	Shape A
Design	Screw-in sockets
Construction	straight
Material	Steel
Surface	electro galvanised



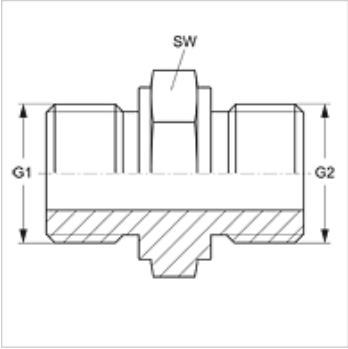

Item

Identification	G1	G2	AF (mm)
GE HR 04	G 1/4" -19	G 1/4" -19	19
GE HR 06 HR 04	G 3/8" -19	G 1/4" -19	22
GE HR 06	G 3/8" -19	G 3/8" -19	22
GE HR 08 HR 06	G 1/2" -14	G 3/8" -19	27
GE HR 08	G 1/2" -14	G 1/2" -14	27
GE HR 12 HR 08	G 3/4" -14	G 1/2" -14	32
GE HR 12	G 3/4" -14	G 3/4" -14	32

AF = Width across flats

Despite careful checking, we cannot guarantee the accuracy of all information included on this site, and we accept no liability.