GE HRED AJ
Screw-in sockets

HANSA-FLEX

Properties

Connection 1	BSP external thread, cylindrical
Sealing form 1	Shape E
Connection 2	UN/UNF nut threads
Sealing form 2	74° inner cone
Design	Screw-in sockets
Construction	straight
Material	Steel
Surface	electro galvanised



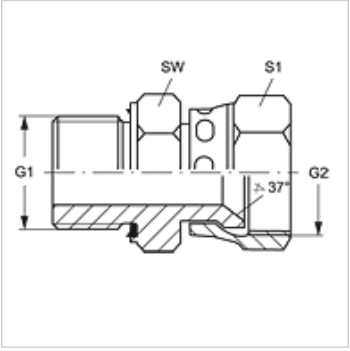

Item

Identification	G1	G2	AF (mm)	S1
GE HRED 02 AJ 04	G 1/8" -28	7/16"-20 UNF	14	14
GE HRED 02 AJ 05	G 1/8" -28	1/2"-20 UNF	14	17
GE HRED 04 AJ 05	G 1/4" -19	1/2"-20 UNF	19	17
GE HRED 04 AJ 06	G 1/4" -19	9/16"-18 UNF	19	19
GE HRED 04 AJ 08	G 1/4" -19	3/4"-16 UNF	19	22
GE HRED 06 AJ	G 3/8" -19	9/16"-18 UNF	22	19
GE HRED 06 AJ 08	G 3/8" -19	3/4"-16 UNF	22	22
GE HRED 06 AJ 10	G 3/8" -19	7/8"-14 UNF	27	27
GE HR ED 08 AJ	G 1/2" -14	3/4"-16 UNF	27	22
GE HRED 08 AJ 10	G 1/2" -14	7/8"-14 UNF	27	27
GE HRED 08 AJ 12	G 1/2" -14	1.1/16" -12 UN	27	32
GE HRED 12 AJ	G 3/4" -14	1.1/16" -12 UN	32	32
GE HRED 12 AJ 16	G 3/4" -14	1.5/16" -12 UN	32	41
GE HRED 16 AJ	G 1" -11	1.5/16" -12 UN	41	41
GE HRED 16 AJ 20	G 1" -11	1.5/8" -12 UN	41	50
GE HRED 20 AJ	G 1.1/4" -11	1.5/8" -12 UN	50	50
GE HRED 20 AJ 24	G 1.1/4" -11	1.7/8" -12 UN	50	60
GE HRED 24 AJ	G 1.1/2" -11	1.7/8" -12 UN	55	60

SW, S1, S2 = With across flats

Product versions

GE HRED AJ VA	Screw-in sockets, Stainless steel

Spare parts

WD	Soft seal for ED fittings

Despite careful checking, we cannot guarantee the accuracy of all information included on this site, and we accept no liability.