GE HRED HJ
Screw-in sockets

HANSA-FLEX

Properties

Connection 1	BSP external thread, cylindrical
Sealing form 1	Shape E
Connection 2	UN/UNF external threads
Sealing form 2	74° outer cone
Design	Screw-in sockets
Construction	straight
Material	Steel
Surface	electro galvanised



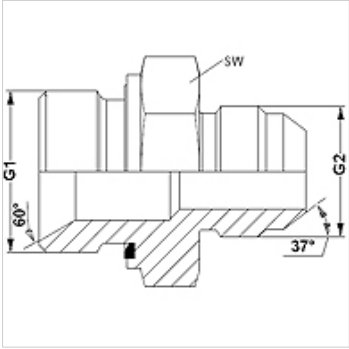

Item

Identification	G1	G2	AF (mm)
GE HRED 02 HJ 04	G 1/8" -28	7/16"-20 UNF	14
GE HRED 02 HJ 05	G 1/8" -28	1/2"-20 UNF	14
GE HRED 02 HJ 06	G 1/8" -28	9/16"-18 UNF	19
GE HRED 04 HJ	G 1/4" -19	7/16"-20 UNF	19
GE HRED 04 HJ 05	G 1/4" -19	1/2"-20 UNF	19
GE HRED 04 HJ 06	G 1/4" -19	9/16"-18 UNF	19
GE HRED 04 HJ 08	G 1/4" -19	3/4"-16 UNF	19
GE HRED 06 HJ 04	G 3/8" -19	7/16"-20 UNF	22
GE HRED 06 HJ 05	G 3/8" -19	1/2"-20 UNF	22
GE HRED 06 HJ	G 3/8" -19	9/16"-18 UNF	22
GE HRED 06 HJ 08	G 3/8" -19	3/4"-16 UNF	22
GE HRED 06 HJ 10	G 3/8" -19	7/8"-14 UNF	24
GE HRED 06 HJ 12	G 3/8" -19	1.1/16" -12 UN	27
GE HRED 08 HJ 04	G 1/2" -14	7/16"-20 UNF	27
GE HRED 08 HJ 06	G 1/2" -14	9/16"-18 UNF	27
GE HRED 08 HJ	G 1/2" -14	3/4"-16 UNF	27
GE HRED 08 HJ 10	G 1/2" -14	7/8"-14 UNF	27
GE HRED 08 HJ 12	G 1/2" -14	1.1/16" -12 UN	27
GE HRED 12 HJ 08	G 3/4" -14	3/4"-16 UNF	32
GE HRED 12 HJ 10	G 3/4" -14	7/8"-14 UNF	32
GE HRED 12 HJ	G 3/4" -14	1.1/16" -12 UN	32
GE HRED 12 HJ 16	G 3/4" -14	1.5/16" -12 UN	36
GE HRED 16 HJ 12	G 1" -11	1.1/16" -12 UN	41
GE HRED 16 HJ	G 1" -11	1.5/16" -12 UN	41
GE HRED 16 HJ 20	G 1" -11	1.5/8" -12 UN	46
GE HRED 16 HJ 24	G 1" -11	1.7/8" -12 UN	50
GE HRED 20 HJ 16	G 1.1/4" -11	1.5/16" -12 UN	50
GE HRED 20 HJ	G 1.1/4" -11	1.5/8" -12 UN	50
GE HRED 20 HJ 24	G 1.1/4" -11	1.7/8" -12 UN	50
GE HRED 24 HJ 20	G 1.1/2" -11	1.5/8" -12 UN	55
GE HRED 24 HJ	G 1.1/2" -11	1.7/8" -12 UN	55

AF = Width across flats

Product versions

GE HRED HJ VA	Screw-in sockets, Stainless steel

Spare parts

WD	Soft seal for ED fittings

Despite careful checking, we cannot guarantee the accuracy of all information included on this site, and we accept no liability.