GE HRK HB VA

Screw-in sockets

Properties

Connection 1	BSPT conical external threads
Sealing form 1	thread seal
Connection 2	BSP cylindrical external threads
Sealing form 2	60° inner cone
Design	Screw-in sockets
Construction	straight
Material	Stainless steel



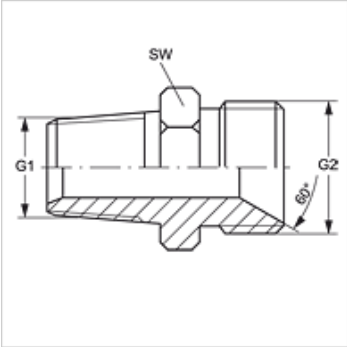

Item

Identification	G1	G2	AF (mm)
GE HRK 02 HB VA	R 1/8" K	G 1/8" -28	11
GE HRK 04 HB 02 VA	R 1/4" K	G 1/8" -28	17
GE HRK 04 HB VA	R 1/4" K	G 1/4" -19	17
GE HRK 04 HB 06 VA	R 1/4" K	G 3/8" -19	17
GE HRK 06 HB VA	R 3/8" K	G 3/8" -19	17
GE HRK 06 HB 08 VA	R 3/8" K	G 1/2" -14	22
GE HRK 08 HB 04 VA	R 1/2" K	G 1/4" -19	22
GE HRK 08 HB VA	R 1/2" K	G 1/2" -14	22
GE HRK 08 HB 12 VA	R 1/2" K	G 3/4" -14	27
GE HRK 10 HB VA	R 5/8" K	G 5/8" -14	27
GE HRK 12 HB 08 VA	R 3/4" K	G 1/2" -14	27
GE HRK 12 HB VA	R 3/4" K	G 3/4" -14	27
GE HRK 16 HB VA	R 1" K	G 1" -11	36
GE HRK 20 HB VA	R 1.1/4" K	G 1.1/4" -11	46
GE HRK 24 HB VA	R 1.1/2" K	G 1.1/2" -11	50
GE HRK 32 HB VA	R 2" K	G 2" -11	65

AF = Width across flats

Product versions

GE HRK HB	Screw-in sockets, Steel

Despite careful checking, we cannot guarantee the accuracy of all information included on this site, and we accept no liability.