GE HRK HJ
Screw-in sockets

HANSA-FLEX

Properties

Connection 1	BSPT conical external threads
Sealing form 1	thread seal
Connection 2	UN/UNF external threads
Sealing form 2	74° outer cone
Design	Screw-in sockets
Construction	straight
Material	Steel
Surface	electro galvanised



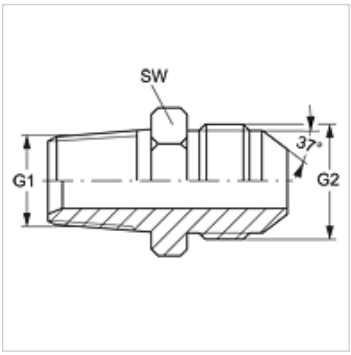

Item

Identification	G1	G2	AF (mm)
GE HRK 02 HJ 04	R 1/8" K	7/16"-20 UNF	14
GE HRK 02 HJ 05	R 1/8" K	1/2"-20 UNF	14
GE HRK 04 HJ	R 1/4" K	7/16"-20 UNF	14
GE HRK 04 HJ 05	R 1/4" K	1/2"-20 UNF	14
GE HRK 04 HJ 06	R 1/4" K	9/16"-18 UNF	19
GE HRK 04 HJ 08	R 1/4" K	3/4"-16 UNF	22
GE HRK 06 HJ 04	R 3/8" K	7/16"-20 UNF	19
GE HRK 06 HJ 05	R 3/8" K	1/2"-20 UNF	19
GE HRK 06 HJ	R 3/8" K	9/16"-18 UNF	19
GE HRK 06 HJ 08	R 3/8" K	3/4"-16 UNF	22
GE HRK 06 HJ 10	R 3/8" K	7/8"-14 UNF	24
GE HRK 06 HJ 12	R 3/8" K	1.1/16" -12 UN	27
GE HRK 08 HJ 06	R 1/2" K	9/16"-18 UNF	22
GE HRK 08 HJ	R 1/2" K	3/4"-16 UNF	22
GE HRK 08 HJ 10	R 1/2" K	7/8"-14 UNF	24
GE HRK 08 HJ 12	R 1/2" K	1.1/16" -12 UN	27
GE HRK 08 HJ 16	R 1/2" K	1.5/16" -12 UN	36
GE HRK 10 HJ	R 5/8" K	7/8"-14 UNF	24
GE HRK 12 HJ 06	R 3/4" K	9/16"-18 UNF	27
GE HRK 12 HJ 08	R 3/4" K	3/4"-16 UNF	27
GE HRK 12 HJ 10	R 3/4" K	7/8"-14 UNF	27
GE HRK 12 HJ	R 3/4" K	1.1/16" -12 UN	27
GE HRK 12 HJ 16	R 3/4" K	1.5/16" -12 UN	36
GE HRK 12 HJ 20	R 3/4" K	1.5/8" -12 UN	46
GE HRK 16 HJ 08	R 1" K	3/4"-16 UNF	36
GE HRK 16 HJ 10	R 1" K	7/8"-14 UNF	36
GE HRK 16 HJ 12	R 1" K	1.1/16" -12 UN	36
GE HRK 16 HJ	R 1" K	1.5/16" -12 UN	36
GE HRK 16 HJ 20	R 1" K	1.5/8" -12 UN	46
GE HRK 20 HJ 12	R 1.1/4" K	1.1/16" -12 UN	46
GE HRK 20 HJ 16	R 1.1/4" K	1.5/16" -12 UN	46
GE HRK 20 HJ	R 1.1/4" K	1.5/8" -12 UN	46
GE HRK 20 HJ 24	R 1.1/4" K	1.7/8" -12 UN	50
GE HRK 24 HJ 16	R 1.1/2" K	1.5/16" -12 UN	50
GE HRK 24 HJ 20	R 1.1/2" K	1.5/8" -12 UN	50
GE HRK 24 HJ	R 1.1/2" K	1.7/8" -12 UN	50
GE HRK 24 HJ 32	R 1.1/2" K	2.1/2" -12 UN	65
GE HRK 32 HJ	R 2" K	2.1/2" -12 UN	65
GE HRK 40 HJ	R 2.1/2" K	3" -11 UN	70
GE HRK 48 HJ	R 3" K	3.1/2" -11 UN	80

AF = Width across flats

Product versions

GE HRK HJ VA	Screw-in sockets, Stainless steel

Despite careful checking, we cannot guarantee the accuracy of all information included on this site, and we accept no liability.