# GE HRK IR

Screw-in sockets

HANSA FLEX

## Properties

| | |
|---|---|
| **Connection 1** | BSPT conical external threads |
| **Sealing form 1** | thread seal |
| **Connection 2** | BSP cylindrical internal threads |
| **Sealing form 2** | Flat seal |
| **Design** | Screw-in sockets |
| **Construction** | straight |
| **Material** | Steel |
| **Surface** | electro galvanised |

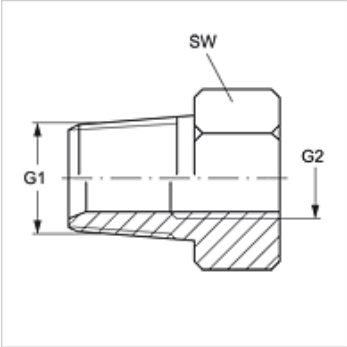


## Item

| Identification | G1 | G2 | AF (mm) |
|---|---|---|---|
| **GE HRK 02 IR 04** | R 1/8" K | G 1/4" -19 | 19 |
| **GE HRK 02 IR 06** | R 1/8" K | G 3/8" -19 | 22 |
| **GE HRK 02 IR 08** | R 1/8" K | G 1/2" -14 | 27 |
| **GE HRK 04 IR 02** | R 1/4" K | G 1/8" -28 | 14 |
| **GE HRK 04 IR** | R 1/4" K | G 1/4" -19 | 19 |
| **GE HRK 04 IR 06** | R 1/4" K | G 3/8" -19 | 22 |
| **GE HRK 04 IR 08** | R 1/4" K | G 1/2" -14 | 27 |
| **GE HRK 06 IR 02** | R 3/8" K | G 1/8" -28 | 19 |
| **GE HRK 06 IR 04** | R 3/8" K | G 1/4" -19 | 19 |
| **GE HRK 06 IR** | R 3/8" K | G 3/8" -19 | 22 |
| **GE HRK 06 IR 08** | R 3/8" K | G 1/2" -14 | 27 |
| **GE HRK 08 IR 04** | R 1/2" K | G 1/4" -19 | 22 |
| **GE HRK 08 IR 06** | R 1/2" K | G 3/8" -19 | 22 |
| **GE HRK 08 IR** | R 1/2" K | G 1/2" -14 | 27 |
| **GE HRK 08 IR 12** | R 1/2" K | G 3/4" -14 | 36 |
| **GE HRK 08 IR 16** | R 1/2" K | G 1" -11 | 41 |
| **GE HRK 12 IR 04** | R 3/4" K | G 1/4" -19 | 27 |
| **GE HRK 12 IR 06** | R 3/4" K | G 3/8" -19 | 27 |
| **GE HRK 12 IR 08** | R 3/4" K | G 1/2" -14 | 27 |
| **GE HRK 12 IR** | R 3/4" K | G 3/4" -14 | 32 |
| **GE HRK 12 IR 16** | R 3/4" K | G 1" -11 | 41 |
| **GE HRK 16 IR 08** | R 1" K | G 1/2" -14 | 36 |
| **GE HRK 16 IR 12** | R 1" K | G 3/4" -14 | 36 |
| **GE HRK 16 IR** | R 1" K | G 1" -11 | 41 |
| **GE HRK 16 IR 20** | R 1" K | G 1.1/4" -11 | 50 |
| **GE HRK 20 IR 08** | R 1.1/4" K | G 1/2" -14 | 50 |
| **GE HRK 20 IR 12** | R 1.1/4" K | G 3/4" -14 | 50 |
| **GE HRK 20 IR 16** | R 1.1/4" K | G 1" -11 | 50 |
| **GE HRK 20 IR 24** | R 1.1/4" K | G 1.1/2" -11 | 55 |
| **GE HRK 24 IR 16** | R 1.1/2" K | G 1" -11 | 55 |
| **GE HRK 24 IR 20** | R 1.1/2" K | G 1.1/4" -11 | 55 |
| **GE HRK 24 IR 32** | R 1.1/2" K | G 2" -11 | 70 |
| **GE HRK 32 IR 20** | R 2" K | G 1.1/4" -11 | 70 |
| **GE HRK 32 IR 24** | R 2" K | G 1.1/2" -11 | 70 |

AF = Width across flats

*Despite careful checking, we cannot guarantee the accuracy of all information included on this site, and we accept no liability.*