GE HRO AJ
Screw-in sockets

HANSA-FLEX

Properties

Connection 1	BSP external thread, cylindrical
Sealing form 1	form G
Connection 2	UN/UNF nut threads
Sealing form 2	74° inner cone
Design	Screw-in sockets
Construction	straight
Material	Steel
Surface	electro galvanised



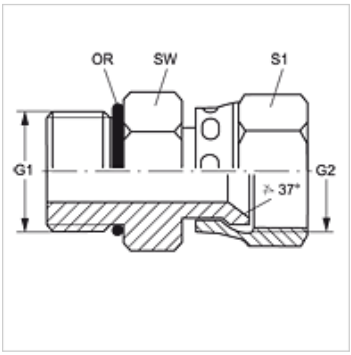

Item

Identification	G1	G2	AF (mm)	S1	OR
GE HRO 02 AJ 04	G 1/8" -28	7/16"-20 UNF	16	16	8.00 x 2.00
GE HRO 04 AJ	G 1/4" -19	7/16"-20 UNF	20	16	10.77 x 2.62
GE HRO 04 AJ 05	G 1/4" -19	1/2"-20 UNF	20	17	10.77 x 2.62
GE HRO 04 AJ 08	G 1/4" -19	3/4"-16 UNF	20	22	10.77 x 2.62
GE HRO 06 AJ 04	G 3/8" -19	7/16"-20 UNF	24	16	13.94 x 2.62
GE HRO 06 AJ 05	G 3/8" -19	1/2"-20 UNF	24	17	13.94 x 2.62
GE HRO 06 AJ	G 3/8" -19	9/16"-18 UNF	24	19	13.94 x 2.62
GE HRO 06 AJ 08	G 3/8" -19	3/4"-16 UNF	24	22	13.94 x 2.62
GE HRO 06 AJ 10	G 3/8" -19	7/8"-14 UNF	24	27	13.94 x 2.62
GE HRO 08 AJ 06	G 1/2" -14	9/16"-18 UNF	28	19	17.86 x 2.62
GE HRO 08 AJ	G 1/2" -14	3/4"-16 UNF	28	22	17.86 x 2.62
GE HRO 08 AJ 10	G 1/2" -14	7/8"-14 UNF	28	27	17.86 x 2.62
GE HRO 08 AJ 12	G 1/2" -14	1.1/16" -12 UN	28	32	17.86 x 2.62
GE HRO 12 AJ 10	G 3/4" -14	7/8"-14 UNF	35	27	23.47 x 2.62
GE HRO 12 AJ 16	G 3/4" -14	1.5/16" -12 UN	35	38	23.47 x 2.62
GE HRO 16 AJ 12	G 1" -11	1.1/16" -12 UN	43	32	29.74 x 3.53
GE HRO 16 AJ 20	G 1" -11	1.5/8" -12 UN	43	50	29.74 x 3.53
GE HRO 20 AJ 16	G 1.1/4" -11	1.5/16" -12 UN	52	38	37.69 x 3.53
GE HRO 20 AJ 24	G 1.1/4" -11	1.7/8" -12 UN	52	58	37.69 x 3.53

SW, S1, S2 = With across flats

Despite careful checking, we cannot guarantee the accuracy of all information included on this site, and we accept no liability.