GE HROK AOB

Screw-in sockets

Properties

Connection 1	BSP external thread, cylindrical
Sealing form 1	Thread socket with O-ring + spacer diaphragm ring
Connection 2	BSP nut thread
Sealing form 2	60° outer cone with O-ring
Design	Screw-in sockets
Construction	straight
Material	Steel
Surface	electro galvanised



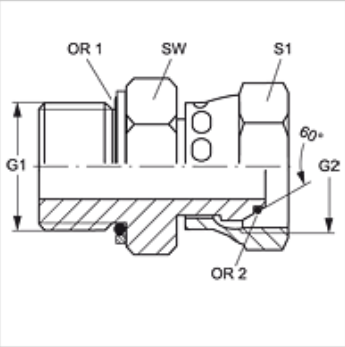

Item

Identification	G1 + G2	AF (mm)	S1	OR1	OR2
GE HROK 04 AOB	G 1/4" -19	20	17	10.77 x 2.62	6.0 x 1.0
GE HROK 06 AOB	G 3/8" -19	24	22	13.94 x 2.62	8.1 x 1.6
GE HROK 08 AOB	G 1/2" -14	28	27	17.86 x 2.62	12.1 x 1.6
GE HROK 12 AOB	G 3/4" -14	35	32	23.47 x 2.62	17.1 x 1.6
GE HROK 16 AOB	G 1" -11	43	41	29.75 x 3.53	22.1 x 1.6
GE HROK 20 AOB	G 1.1/4" -11	52	50	37.69 x 3.53	29.1 x 1.6
GE HROK 24 AOB	G 1.1/2" -11	58	60	44.04 x 3.53	35.1 x 1.6

SW, S1, S2 = With across flats

Spare parts

KAMMRING G	Spacer diaphragm ring, imperial

Despite careful checking, we cannot guarantee the accuracy of all information included on this site, and we accept no liability.