GE HROK L HJ

Screw-in socket, long

HANSA-FLEX

Properties

Connection 1	BSP external thread, cylindrical
Sealing form 1	Thread socket with O-ring + spacer diaphragm ring
Connection 2	UN/UNF external threads
Sealing form 2	74° outer cone
Design	Screw-in socket, long
Construction	straight
Material	Steel
Surface	electro galvanised



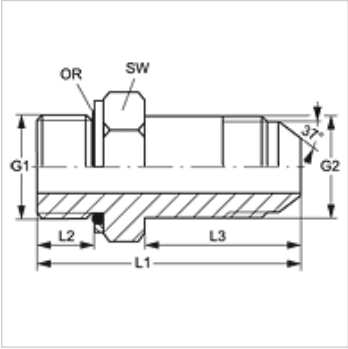

Item

Identification	G1	G2	L1 (mm)	L2 (mm)	L3 (mm)	AF (mm)	OR
GE HROK L 02 HJ 04	G 1/8" -28	7/16"-20 UNF	50,0	7,0	35	16	7.65 x 1.78
GE HROK L 04 HJ	G 1/4" -19	7/16"-20 UNF	55,5	10,0	35	20	10.78 x 2.62
GE HROK L 04 HJ 05	G 1/4" -19	1/2"-20 UNF	57,5	10,0	37	20	10.78 x 2.62
GE HROK L 04 HJ 06	G 1/4" -19	9/16"-18 UNF	59,5	10,0	39	20	10.78 x 2.62
GE HROK L 04 HJ 08	G 1/4" -19	3/4"-16 UNF	68,5	10,0	48	20	10.78 x 2.62
GE HROK L 06 HJ	G 3/8" -19	9/16"-18 UNF	59,5	10,0	39	24	13.94 x 2.62
GE HROK L 06 HJ 05	G 3/8" -19	1/2"-20 UNF	57,5	10,0	37	24	13.94 x 2.62
GE HROK L 06 HJ 08	G 3/8" -19	3/4"-16 UNF	68,5	10,0	48	24	13.94 x 2.62
GE HROK L 06 HJ 10	G 3/8" -19	7/8"-14 UNF	74,0	10,0	53	24	13.94 x 2.62
GE HROK L 08 HJ	G 1/2" -14	3/4"-16 UNF	72,0	12,0	48	28	17.86 x 2.62
GE HROK L 08 HJ 06	G 1/2" -14	9/16"-18 UNF	63,0	12,0	39	28	17.86 x 2.62
GE HROK L 08 HJ 10	G 1/2" -14	7/8"-14 UNF	77,0	12,0	53	28	17.86 x 2.62
GE HROK L 08 HJ 12	G 1/2" -14	1.1/16" -12 UN	88,0	12,0	63	28	17.86 x 2.62
GE HROK L 12 HJ	G 3/4" -14	1.1/16" -12 UN	91,0	14,0	63	35	23.47 x 2.62
GE HROK L 12 HJ 10	G 3/4" -14	7/8"-14 UNF	81,0	14,0	53	35	23.47 x 2.62
GE HROK L 12 HJ 16	G 3/4" -14	1.5/16" -12 UN	100,0	14,0	72	36	23.47 x 2.62
GE HROK L 16 HJ	G 1" -11	1.5/16" -12 UN	102,0	15,5	72	43	29.74 x 3.53
GE HROK L 16 HJ 12	G 1" -11	1.1/16" -12 UN	93,5	15,5	63	43	29.74 x 3.53
GE HROK L 16 HJ 20	G 1" -11	1.5/8" -12 UN	119,0	15,5	88	43	29.74 x 3.53
GE HROK L 20 HJ	G 1.1/4" -11	1.5/8" -12 UN	122,0	17,5	88	52	37.69 x 3.53
GE HROK L 20 HJ 16	G 1.1/4" -11	1.5/16" -12 UN	106,0	17,5	72	52	37.69 x 3.53
GE HROK L 20 HJ 24	G 1.1/4" -11	1.7/8" -12 UN	132,0	17,5	98	52	37.69 x 3.53
GE HROK L 24 HJ	G 1.1/2" -11	1.7/8" -12 UN	136,0	19,5	98	58	44.04 x 3.53

AF = Width across flats

Spare parts

KAMMRING G	Spacer diaphragm ring, imperial

Despite careful checking, we cannot guarantee the accuracy of all information included on this site, and we accept no liability.