GE M HJOF
Screw-in sockets

Properties

Connection 1	metric cylindrical outer thread
Sealing form 1	Shape A
Connection 2	ORFS external threads
Sealing form 2	flat seal with O-ring
Design	Screw-in sockets
Construction	straight
Material	Steel
Surface	electro galvanised



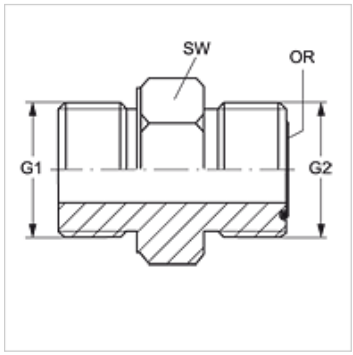

Item

Identification	G1	G2	AF (mm)	OR
GE M12 HJOF 04	M 12 x 1.5	9/16"-18 UNF	17	7.65 x 1.78
GE M16 HJOF 06	M 16 x 1.5	11/16" -16 UN	22	9.25 x 1.78
GE M27 HJOF 12	M 27 x 2	1.3/16" -12 UN	32	18.77 x 1.78

AF = Width across flats

Despite careful checking, we cannot guarantee the accuracy of all information included on this site, and we accept no liability.