SV HJ IN
Bulkhead fitting socket

HANSA-FLEX

Properties

Connection 1	UN/UNF external threads
Sealing form 1	74° outer cone
Connection 2	NPT internal thread
Sealing form 2	thread seal
Design	Bulkhead fitting socket
Construction	straight
Material	Steel
Surface	electro galvanised

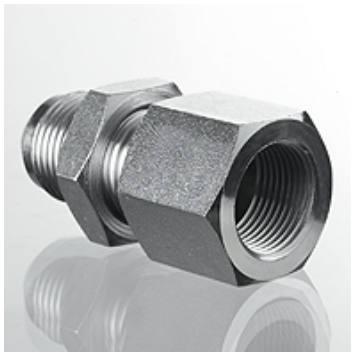

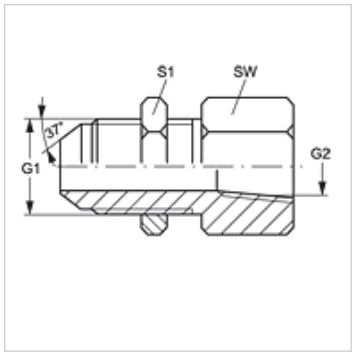

Item

Identification	G1	G2	AF (mm)	S1
SV HJ 04 IN 02	7/16"-20 UNF	1/8" -27 NPT	17	17
SV HJ 04 IN	7/16"-20 UNF	1/4" -18 NPT	19	19
SV HJ 05 IN 02	1/2"-20 UNF	1/8" -27 NPT	21	17
SV HJ 05 IN 04	1/2"-20 UNF	1/4" -18 NPT	19	17
SV HJ 06 IN 02	9/16"-18 UNF	1/8" -27 NPT	17	21
SV HJ 06 IN 04	9/16"-18 UNF	1/4" -18 NPT	21	21
SV HJ 06 IN	9/16"-18 UNF	3/8" -18 NPT	25	21
SV HJ 08 IN 04	3/4"-16 UNF	1/4" -18 NPT	21	25
SV HJ 08 IN 06	3/4"-16 UNF	3/8" -18 NPT	25	25
SV HJ 08 IN	3/4"-16 UNF	1/2" -14 NPT	29	25
SV HJ 10 IN 08	7/8" -14 UNF	1/2" -14 NPT	29	29
SV HJ 12 IN 08	1.1/16" -12 UN	1/2" -14 NPT	29	35
SV HJ 12 IN	1.1/16" -12 UN	3/4" -14 NPT	35	35
SV HJ 14 IN 12	1.3/16" -12 UN	3/4" -14 NPT	35	41
SV HJ 16 IN	1.5/16" -12 UN	1" -11.5 NPT	41	41
SV HJ 20 IN	1.5/8" -12 UN	1.1/4" -11.5 NPT	46	46
SV HJ 24 IN	1.7/8" -12 UN	1.1/2" -11.5 NPT	50	50

SW, S1, S2 = With across flats

Despite careful checking, we cannot guarantee the accuracy of all information included on this site, and we accept no liability.