SV HJ VA
Bulkhead fitting socket

Properties

Connection 1	UN/UNF external threads
Sealing form 1	74° outer cone
Connection 2	UN/UNF external threads
Sealing form 2	74° outer cone
Design	Bulkhead fitting socket
Construction	straight
Material	Stainless steel



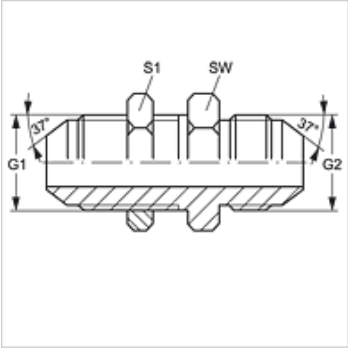

Item

Identification	G1 + G2	AF (mm)	S1
SV HJ 04 VA	7/16"-20 UNF	17	17
SV HJ 05 VA	1/2"-20 UNF	19	19
SV HJ 06 VA	9/16"-18 UNF	22	22
SV HJ 08 VA	3/4"-16 UNF	24	24
SV HJ 10 VA	7/8"-14 UNF	30	30
SV HJ 12 VA	1.1/16" -12 UN	36	36
SV HJ 16 VA	1.5/16" -12 UN	41	41
SV HJ 20 VA	1.5/8" -12 UN	50	50
SV HJ 24 VA	1.7/8" -12 UN	55	55

SW, S1, S2 = With across flats

Product versions

SV HJ	Bulkhead fitting socket, Steel

Despite careful checking, we cannot guarantee the accuracy of all information included on this site, and we accept no liability.