SV HJOF VA
Bulkhead fitting socket

Properties

Connection 1	ORFS external threads
Sealing form 1	flat seal with O-ring
Connection 2	ORFS external threads
Sealing form 2	flat seal with O-ring
Design	Bulkhead fitting socket
Construction	straight
Material	Stainless steel



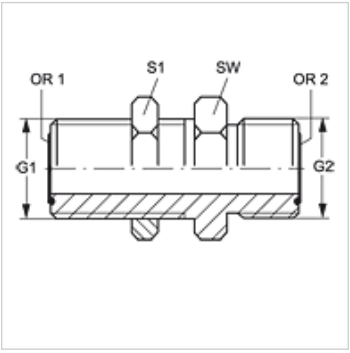

Ordering information

Seals of NBR
FPM (Viton) on request

Item

Identification	G1 + G2	AF (mm)	S1	OR1 + OR2
SV HJOF 04 VA	9/16"-18 UNF	22	22	7.66 x 1.78
SV HJOF 06 VA	11/16" -16 UN	27	27	9.25 x 1.78
SV HJOF 08 VA	13/16" -16 UN	30	30	12.42 x 1.78
SV HJOF 12 VA	1.3/16" -12 UN	41	41	18.77 x 1.78

SW, S1, S2 = With across flats

Product versions

SV HJOF	Bulkhead fitting socket, Steel

Despite careful checking, we cannot guarantee the accuracy of all information included on this site, and we accept no liability.