RKL STUETZRING

Support ring for pipe coupling

Properties

suitable for	Pipe coupling (loose)
Material	PVC



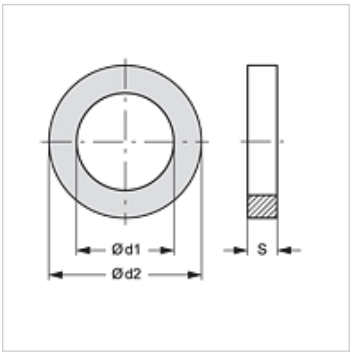

Item

Identification	Size	Ø d1 (mm)	Ø d2 (mm)	S (mm)
RKL STUETZRING 1	1	17,5	20,8	1,0
RKL STUETZRING 2	2	20,0	23,4	1,0
RKL STUETZRING 4	4	32,0	37,2	1,0

Spare part for following products

RKL HL / RKL HS	Pipe coupling (loose)

Despite careful checking, we cannot guarantee the accuracy of all information included on this site, and we accept no liability.