SKF STUETZRING

Support ring for SKF

Properties

suitable for	Screw coupling (fixed)
Material	PVC



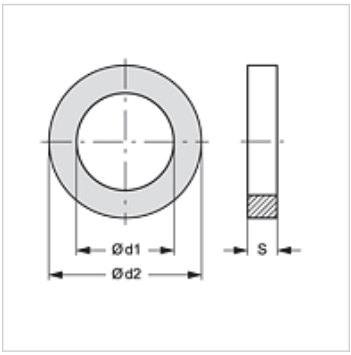

Item

Identification	Size	Ø d1 (mm)	Ø d2 (mm)	S (mm)
SKF STUETZRING 1	1	13,0	16,1	1,0
SKF STUETZRING 2	2	17,5	20,7	1,0
SKF STUETZRING 3	3	22,0	27,4	1,0
SKF STUETZRING 4	4	28,0	33,2	1,0
SKF STUETZRING 5	5	35,0	39,0	1,0
SKF STUETZRING 6	6	54,0	58,6	1,0

Spare part for following products

SKFS HL / SKFS HS	Screw coupling (fixed)
SKF HL / SKF HS	Screw coupling (fixed)
SKF IM	Screw coupling (fixed)
SKF IR	Screw coupling (fixed)
SKF HJ	Screw coupling (fixed)
SKF SF6	Screw coupling (fixed)

Despite careful checking, we cannot guarantee the accuracy of all information included on this site, and we accept no liability.