SKM STUETZRING AE

Support ring for SKM...AE

Properties

suitable for	Plug-in coupling sleeve SKM...AE
Material	PVC



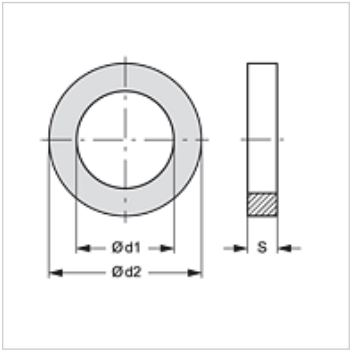

Item

Identification	Ø d1 (mm)	Ø d2 (mm)	S (mm)
SKM STUETZRING 3 AE	21,0	26,5	1,0

Spare part for following products

SKM IM AE	Plug-in coupling sleeve
SKM IN AE	Plug-in coupling sleeve
SKM IR AE	Plug-in coupling sleeve

Despite careful checking, we cannot guarantee the accuracy of all information included on this site, and we accept no liability.