PA 500 AOS VA
Swage fitting, DKOS

Properties

Application	Swage fitting for HD 500 hoses
Connection 1	metric nut thread
Sealing form 1	24° outer cone with O-ring
Short code	DKOS
Standard	ISO 8434-1
Integration	with pull-out protection (interlock)
Scope of supply	Swage nipple + swage ferrule
Material	Stainless steel



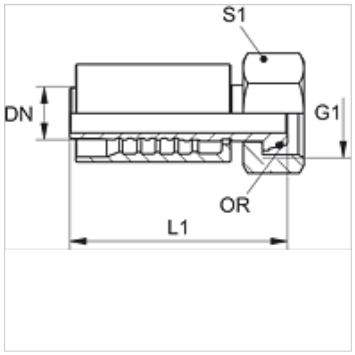

Ordering information

Seals of NBR
FPM (Viton) on request

Item

Identification	DN	Size	Inches	G1	for external pipe Ø (mm)	S1	OR
PA 520 AOS 16 VA	19	12	3/4"	M 30 x 2	20	36	16.0 x 2.5
PA 520 AOS VA	19	12	3/4"	M 36 x 2	25	46	20.0 x 2.5
PA 525 AOS 20 VA	25	16	1"	M 36 x 2	25	46	20.0 x 2.5
PA 525 AOS VA	25	16	1"	M 42 x 2	30	50	25.0 x 2.5
PA 532 AOS VA	31	20	1.1/4"	M 52 x 2	38	60	33.0 x 2.5
PA 540 AOS VA	38	24	1.1/2"	M 68 x 2	50	80	38.0 x 2.5

Product versions

PA 500 AOS A	Swage fitting, DKOS, Steel

Despite careful checking, we cannot guarantee the accuracy of all information included on this site, and we accept no liability.