PA 500 SF 90 VA

Swage fitting, SFL angle 90°

Properties

Application	Swage fitting for HD 500 hoses
Connection 1	SAE flange connection 3000 PSI
Sealing form 1	flat seal with SF O-ring
Short code	SFL
Standard	SAE J518 ISO 6162-1
Integration	with pull-out protection (interlock)
Scope of supply	Swage nipple + swage ferrule
Material	Stainless steel



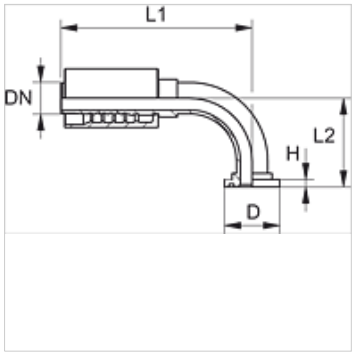

Ordering information

Seals of NBR

FPM (Viton) on request

Item

Identification	DN	Size	Inches	Flange size	D (mm)	H (mm)	L2 (mm)
PA 520 SF 90 VA	19	12	3/4"	3/4"	38,1	6,7	71,0
PA 520 SF 25 90 VA	19	12	3/4"	1"	44,5	8,0	71,0
PA 525 SF 90 VA	25	16	1"	1"	44,5	9,0	75,0
PA 525 SF 32 90 VA	25	16	1"	1.1/4"	50,8	8,0	88,0
PA 532 SF 90 VA	31	20	1.1/4"	1.1/4"	50,8	8,0	91,5
PA 532 SF 40 90 VA	31	20	1.1/4"	1.1/2"	60,3	8,0	95,0
PA 540 SF 90 VA	38	24	1.1/2"	1.1/2"	60,3	8,0	105,0
PA 540 SF 50 90 VA	38	24	1.1/2"	2"	71,4	9,5	121,0
PA 550 SF 90 VA	51	32	2"	2"	71,4	9,5	137,0

Product versions

PA 500 SF 90 A	Swage fitting, SFL angle 90°, Steel

Despite careful checking, we cannot guarantee the accuracy of all information included on this site, and we accept no liability.