PA 500 SF6 90 VA

Swage fitting, SFS angle 90°

HANSA-FLEX

Properties

Application	Swage fitting for HD 500 hoses
Connection 1	SAE flange connection 6000 PSI
Sealing form 1	flat seal with SF O-ring
Short code	SFS
Standard	SAE J518 ISO 6162-2
Integration	with pull-out protection (interlock)
Scope of supply	Swage nipple + swage ferrule
Material	Stainless steel



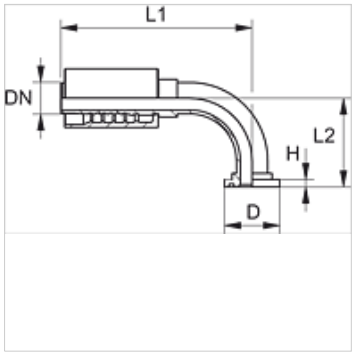

Ordering information

Seals of NBR

FPM (Viton) on request

Item

Identification	DN	Size	Inches	Flange size	D (mm)	H (mm)	L2 (mm)
PA 520 SF6 90 VA	19	12	3/4"	3/4"	41,3	8,8	71,0
PA 520 SF6 25 90 VA	19	12	3/4"	1"	47,6	9,5	72,0
PA 525 SF6 90 VA	25	16	1"	1"	47,6	9,5	77,0
PA 525 SF6 32 90 VA	25	16	1"	1.1/4"	54,0	10,3	90,0
PA 532 SF6 90 VA	31	20	1.1/4"	1.1/4"	54,0	10,3	93,5
PA 532 SF6 40 90 VA	31	20	1.1/4"	1.1/2"	63,5	12,6	96,0
PA 540 SF6 90 VA	38	24	1.1/2"	1.1/2"	63,5	12,6	107,0
PA 540 SF6 50 90 VA	38	24	1.1/2"	2"	79,4	12,6	121,5
PA 550 SF6 90 VA	51	32	2"	2"	79,4	12,6	142,0

Product versions

PA 500 SF6 90 A	Swage fitting, SFS angle 90°, Steel

Despite careful checking, we cannot guarantee the accuracy of all information included on this site, and we accept no liability.