ND AFL
Plug-in nipple, DKL

Properties

Connection 1	metric nut thread
Sealing form 1	24°/60° Universal sealing head
Short code	DKL
Material	Steel
Surface	electro galvanised

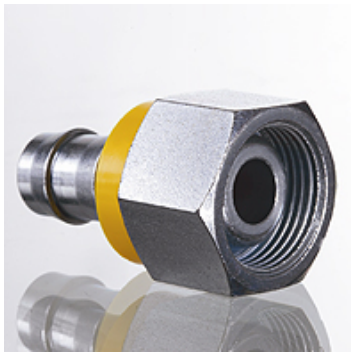

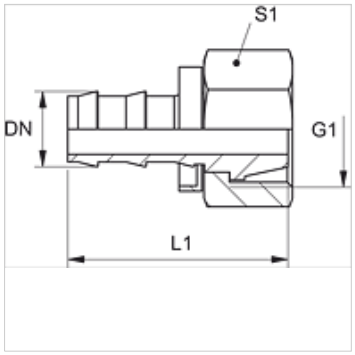

Note

Undamaged nipples can be reused.

Item

Identification	DN	Size	Inches	G1	for external pipe Ø (mm)	L1 (mm)	S1
ND 06 AFL 04	6	4	1/4"	M 12 x 1.5	6	33,0	14
ND 06 AFL	6	4	1/4"	M 14 x 1.5	8	33,0	17
ND 06 AFL 08	6	4	1/4"	M 16 x 1.5	10	34,0	19
ND 10 AFL 08	10	6	3/8"	M 16 x 1.5	10	38,0	19
ND 10 AFL	10	6	3/8"	M 18 x 1.5	12	38,0	22
ND 13 AFL 10	12	8	1/2"	M 18 x 1.5	12	-	-
ND 13 AFL	12	8	1/2"	M 22 x 1.5	15	43,5	27
ND 16 AFL 13	16	10	5/8"	M 22 x 1.5	15	56,0	27
ND 16 AFL	16	10	5/8"	M 26 x 1.5	18	53,0	32
ND 20 AFL	19	12	3/4"	M 30 x 2	22	53,5	36
ND 25 AFL	25	16	1"	M 36 x 2	28	58,0	41

Accessories

ND ASR GE, RO, BL	Stop ring for plug-in nipple

Despite careful checking, we cannot guarantee the accuracy of all information included on this site, and we accept no liability.