PA 500 AJ A H

Swage fitting, DKJ

Properties

Application	Swage fitting for HD 500 hoses
Connection 1	UN/UNF nut threads
Sealing form 1	74° inner cone
Short code	DKJ
Standard	ISO 8434-2
Integration	with pull-out protection (interlock)
Scope of supply	Swage nipple + swage ferrule
Additional feature	for breaker operation
Material	Steel
Surface	electro galvanised



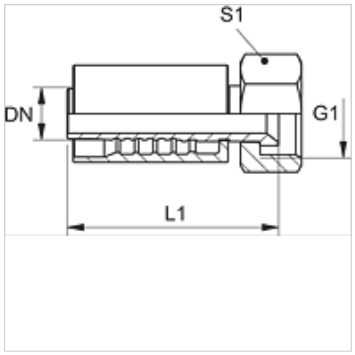

Description

Reinforced design for extreme loads, e.g. use in hammers.

Item

Identification	DN	Size	Inches	Operating pressure (bar)	G1	L1 (mm)	S1
PA 720 AJ H	19	12	3/4"	345,0	1.1/16" -12 UN	91,5	32
PA 725 AJ H	25	16	1"	275,0	1.5/16" -12 UN	98,2	41
PA 725 AJ 32 H	25	16	1"	200,0	1.5/8" -12 UN	111,0	50
PA 532 AJ AH	31	20	1.1/4"	200,0	1.5/8" -12 UN	-	-

Despite careful checking, we cannot guarantee the accuracy of all information included on this site, and we accept no liability.