PA 500 AJ VA

Swage fitting, DKJ

HANSA-FLEX

Properties

Application	Swage fitting for HD 500 hoses
Connection 1	UN/UNF nut threads
Sealing form 1	74° inner cone
Short code	DKJ
Standard	ISO 8434-2
Integration	with pull-out protection (interlock)
Scope of supply	Swage nipple + swage ferrule
Material	Stainless steel



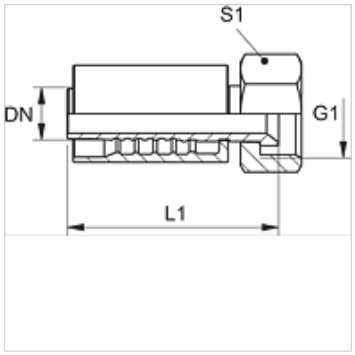

Item

Identification	DN	Size	Inches	Operating pressure (bar)	G1	S1
PA 520 AJ VA	19	12	3/4"	350,0	1.1/16" -12 UN	32
PA 520 AJ 25 VA	19	12	3/4"	280,0	1.5/16" -12 UN	41
PA 525 AJ VA	25	16	1"	280,0	1.5/16" -12 UN	41
PA 525 AJ 32 VA	25	16	1"	210,0	1.5/8" -12 UN	50
PA 532 AJ VA	31	20	1.1/4"	210,0	1.5/8" -12 UN	50
PA 532 AJ 40 VA	31	20	1.1/4"	160,0	1.7/8" -12 UN	60
PA 540 AJ VA	38	24	1.1/2"	160,0	1.7/8" -12 UN	60
PA 540 AJ 50 VA	38	24	1.1/2"	125,0	2.1/2" -12 UN	-
PA 550 AJ VA	51	32	2"	125,0	2.1/2" -12 UN	70

Despite careful checking, we cannot guarantee the accuracy of all information included on this site, and we accept no liability.