PA 500 AJF A

Swage fitting, ORFS

Properties

Application	Swage fitting for HD 500 hoses
Connection 1	UN/UNF nut threads
Sealing form 1	flat sealing
Short code	ORFS
Standard	ISO 8434-3
Integration	with pull-out protection (interlock)
Scope of supply	Swage nipple + swage ferrule
Material	Steel
Surface	electro galvanised



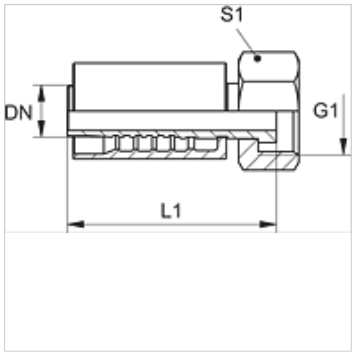

Item

Identification	DN	Size	Inches	Operating pressure (bar)	G1	L1 (mm)	S1
PA 720 AJF	19	12	3/4"	413,0	1.3/16" -12 UN	108,0	36
PA 720 AJF 25	19	12	3/4"	413,0	1.7/16" -12 UN	98,0	41
PA 725 AJF	25	16	1"	413,0	1.7/16" -12 UN	122,0	41
PA 532 AJF A	31	20	1.1/4"	275,0	1.11/16" -12 UN	129,0	50
PA 540 AJF A	38	24	1.1/2"	275,0	2" -12 UN	141,0	60

Despite careful checking, we cannot guarantee the accuracy of all information included on this site, and we accept no liability.