PA 500 AOB A

Swage fitting, DKOR

Properties

Application	Swage fitting for HD 500 hoses
Connection 1	BSP nut thread
Sealing form 1	60° outer cone with O-ring
Short code	DKOR
Standard	ISO 8434-6 BS 5200
Integration	with pull-out protection (interlock)
Scope of supply	Swage nipple + swage ferrule
Material	Steel
Surface	electro galvanised



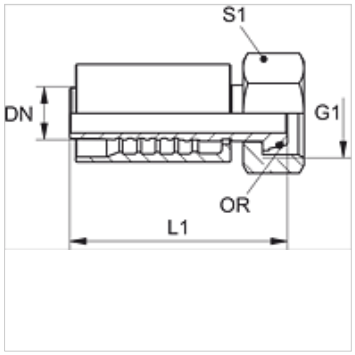

Item

Identification	DN	Size	Inches	G1	L1 (mm)	S1	OR
PA 720 AOB	19	12	3/4"	G 3/4" -14	88,0	32	17.1 x 1.6
PA 725 AOB	25	16	1"	G 1" -11	102,5	41	22.1 x 1.6
PA 532 AOB A	31	20	1.1/4"	G 1.1/4" -11	116,0	50	29.1 x 1.6
PA 540 AOB A	38	24	1.1/2"	G 1.1/2" -11	133,5	55	35.1 x 1.6
PA 550 AOB A	51	32	2"	G 2" -11	147,0	70	48.1 x 1.6

Product versions

PA 500 AOB VA	Swage fitting, DKOR, Stainless steel

Despite careful checking, we cannot guarantee the accuracy of all information included on this site, and we accept no liability.