PA 500 AOL 90 VA

Swage fitting, DKOL angle 90°

Properties

Application	Swage fitting for HD 500 hoses
Connection 1	metric nut thread
Sealing form 1	24° outer cone with O-ring
Short code	DKOL
Standard	ISO 8434-1
Integration	with pull-out protection (interlock)
Scope of supply	Swage nipple + swage ferrule
Material	Stainless steel



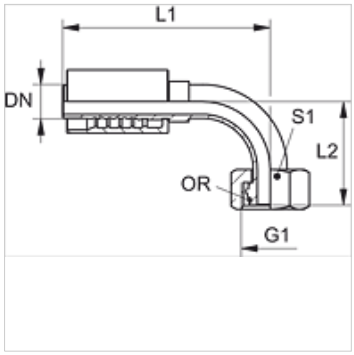

Ordering information

Seals of NBR

FPM (Viton) on request

Item

Identification	DN	Size	Inches	G1	for external pipe Ø (mm)	L2 (mm)	S1	OR
PA 520 AOL 90 VA	19	12	3/4"	M 30 x 2	22	58,0	36	20.0 x 2.0
PA 525 AOL 90 VA	25	16	1"	M 36 x 2	28	92,0	41	25.0 x 2.0
PA 532 AOL 90 VA	31	20	1.1/4"	M 45 x 2	35	98,0	50	30.0 x 2.5
PA 540 AOL 90 VA	38	24	1.1/2"	M 52 x 2	42	117,0	60	38.0 x 2.5

Product versions

PA 500 AOL 90 A	Swage fitting DKOL W90°, Steel

Despite careful checking, we cannot guarantee the accuracy of all information included on this site, and we accept no liability.