PA 500 AOS A
Swage fitting, DKOS

HANSA-FLEX

Properties

Application	Swage fitting for HD 500 hoses
Connection 1	metric nut thread
Sealing form 1	24° outer cone with O-ring
Short code	DKOS
Standard	ISO 8434-1
Integration	with pull-out protection (interlock)
Scope of supply	Swage nipple + swage ferrule
Material	Steel
Surface	electro galvanised



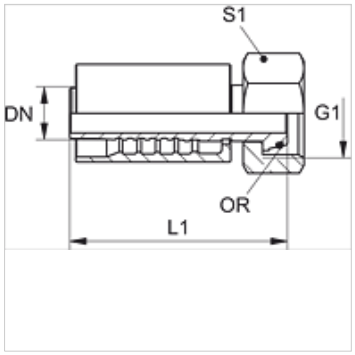

Item

Identification	DN	Size	Inches	G1	for external pipe Ø (mm)	L1 (mm)	S1	OR
PA 720 AOS 16	19	12	3/4"	M 30 x 2	20	101,8	36	17.5 x 2.5
PA 720 AOS	19	12	3/4"	M 36 x 2	25	99,0	46	20.0 x 2.5
PA 725 AOS 20	25	16	1"	M 36 x 2	25	112,0	46	22.0 x 2.5
PA 725 AOS	25	16	1"	M 42 x 2	30	113,0	50	25.0 x 2.5
PA 725 AOS 32	25	16	1"	M 52 x 2	38	131,0	60	33.0 x 2.5
PA 532 AOS 25 A	31	20	1.1/4"	M 42 x 2	30	120,0	50	25.0 x 2.5
PA 532 AOS A	31	20	1.1/4"	M 52 x 2	38	124,5	60	33.0 x 2.5

Product versions

PA 500 AOS VA	Swage fitting, DKOS, Stainless steel

Despite careful checking, we cannot guarantee the accuracy of all information included on this site, and we accept no liability.