# PA 500 HB A

Swage fitting, AGR

HANSA-FLEX

## Properties

| | |
|---|---|
| **Application** | Swage fitting for HD 500 hoses |
| **Connection 1** | BSP external thread, cylindrical |
| **Sealing form 1** | 60° inner cone |
| **Short code** | AGR |
| **Standard** | ISO 8434-6<br>BS 5200 |
| **Integration** | with pull-out protection (interlock) |
| **Scope of supply** | Swage nipple + swage ferrule |
| **Material** | Steel |
| **Surface** | electro galvanised |



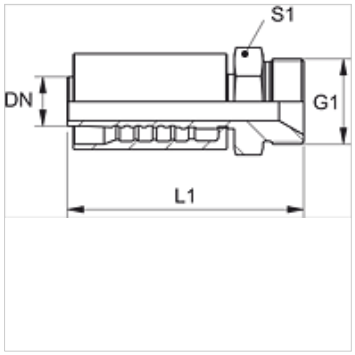


## Item

| Identification | DN | Size | Inches | G1 | L1 (mm) | S1 |
|---|---|---|---|---|---|---|
| **PA 720 HB** | 19 | 12 | 3/4" | G 3/4" -14 | 97,5 | 32 |
| **PA 725 HB** | 25 | 16 | 1" | G 1" -11 | 114,5 | 41 |
| **PA 532 HB A** | 31 | 20 | 1.1/4" | G 1.1/4" -11 | 125,5 | 50 |
| **PA 540 HB A** | 38 | 24 | 1.1/2" | G 1.1/2" -11 | 143,5 | 55 |
| **PA 550 HB A** | 51 | 32 | 2" | G 2" -11 | 162,0 | 70 |

*Despite careful checking, we cannot guarantee the accuracy of all information included on this site, and we accept no liability.*