PA 500 HN A
Swage fitting, AGN

Properties

Application	Swage fitting for HD 500 hoses
Connection 1	NPT external threads
Sealing form 1	thread seal, additional 60° inner cone.
Short code	AGN
Integration	with pull-out protection (interlock)
Scope of supply	Swage nipple + swage ferrule
Material	Steel
Surface	electro galvanised



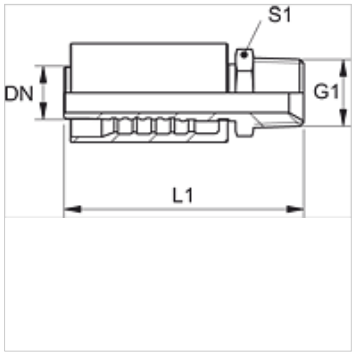

Item

Identification	DN	Size	Inches	G1	L1 (mm)	S1
PA 720 HN	19	12	3/4"	3/4" -14 NPT	98,0	27
PA 725 HN	25	16	1"	1" -11.5 NPT	116,0	36
PA 725 HN 32	25	16	1"	1.1/4" -11.5 NPT	118,0	46
PA 532 HN A	31	20	1.1/4"	1.1/4" -11.5 NPT	124,5	46
PA 540 HN A	38	24	1.1/2"	1.1/2" -11.5 NPT	139,5	50
PA 550 HN A	51	32	2"	2" -11.5 NPT	157,0	65

Product versions

PA 500 HN VA	Swage fitting, AGN, Stainless steel

Despite careful checking, we cannot guarantee the accuracy of all information included on this site, and we accept no liability.